# PACK MULE

## INDUSTRIAL ELECTRIC VEHICLE

*Vehicle shown with optional equipment*

BC NXG and BCT NXG Series

January 2018

# Introduction

Thank you for choosing a Pack Mule Industrial Electric Vehicle, proudly built in the USA by Wesley International. Wesley International is committed to providing you with the best quality product and backing it with exceptional customer service. This owner's manual is provided to help you get the most out of your new vehicle for many years to come. For convenience, record your product information in the space below and keep this information with the vehicle. The model and serial numbers can be found on the vehicle identification plate attached to the side of the motor compartment. See page 5 for the location of the vehicle identification plate.

**Record Your Product Information**

Model #: _____

Serial #: _____

Purchase Date: _____

### Register Your Pack Mule

Registration is easy. Just go to http://www.packmule.com/mule-owners/register-a-mule/, complete the online form, and click submit.

### If You Need Help

You will find many answers in this manual or online at www.packmule.com. If you don't find what you need, just email us at info@wesleyintl.com or call (800) 241-2869 or (404) 292-7441. We're always glad to help.

## Important

**Product registration is required for warranty coverage.**

PACK MULE

**Wesley International**

**3680 Chestnut Street**

**Scottdale, GA 30079**

**Phone (404) 292-7441 • Toll Free (800) 241-2869 • Fax (404) 292-8469**

**info@wesleyintl.com • www.wesleyinternational.com**

# Contents


**Safety Information ..... 3**
Training ..... 3
Operator Qualifications ..... 3
Safety Guidelines ..... 3
Loading and Unloading ..... 3
Ventilation ..... 4
Towing ..... 4
Maintenance ..... 4

**Operating Instructions ..... 5**
Before Putting Your Vehicle in Service ..... 5
Vehicle Identification ..... 5
Charging Batteries ..... 5
Vehicle Controls, Meters, Switches ..... 5
Horn ..... 6
Accelerator/Brake ..... 6
Left-foot Presence Switch ..... 6
Optional Equipment ..... 6
The Smart View Display ..... 6
Driving the Pack Mule NXG ..... 7
Parking ..... 7
Driver Assist on Inclines ..... 7
Start-up Checklist ..... 8
Maintenance Schedule ..... 9

**Maintenance Instructions ..... 10**
Routine Maintenance ..... 10
Batteries ..... 10
Battery Care ..... 11
Electrolyte Levels ..... 11
Optional Battery Watering System ..... 11
Cleaning Batteries ..... 11
Battery Replacement ..... 11
Connecting the Batteries ..... 11
Lifting the Vehicle ..... 12
Tires and Wheels ..... 12
Brakes ..... 12
Electrical Components ..... 13

**Appendices ..... 27**
Appendix A: Industry Standards ..... 27
Appendix B: Programming the Safe-T-Lock Switch ..... 32
Appendix C: Specifications ..... 34
Appendix D: Components—Electrical ..... 35
Appendix D: Components—Electrical (cont.) ..... 36
Appendix E: Front Axle ..... 37
Appendix F: Transaxle—BC Series ..... 38
Appendix G: Transaxle—BCT Series ..... 40
Appendix H: Beacon (Optional) ..... 42
Appendix I: Options ..... 43

# Please read this first:

When you receive your Pack Mule NXG vehicle, it's important to visually inspect the machine for any damage that may have occurred during shipping. If you find any shipping damage, have it noted on the carrier's bill immediately, specifically identifying the nature of the damage.

Keep this manual with the vehicle at all times. It provides operating and maintenance instructions, as well as precautions for the safe operation of the vehicle. It is the responsibility of the owner, user, lessor or lessees to ensure that the vehicle is used as intended.

Please read this entire manual to familiarize yourself with the safe operation of this vehicle, paying particular attention to anything labeled *Caution, Note, or Warning*. See below for the graphic representation of these. We also encourage you to read the industry standard operating and safety procedures in Appendix A.

Because of continuing product improvement, changes or updates may be made to this manual, making it subject to change without notice. For the most up-to-date version of the manual, go to the Pack Mule website (http://www.packmule.com/support/product-manuals) or call Wesley International at 1-800-241-2869.

The Pack Mule Division of Wesley International reserves the right to incorporate engineering and design changes to products in this manual without any obligation to include these changes on any units or vehicles already purchased or leased.

The Pack Mule Division and/or Wesley International accepts no liability in connection with any errors or omissions in this manual and specifically disclaims any liability for any incidental and consequential damages arising from the use of information in this manual.

The use of non-OEM (Original Equipment Manufacturer) parts may void the warranty.

Overfilling the batteries may void the warranties.

# Notes, Cautions, and Warnings

Throughout this manual important information will be emphasized under one of the following headings. Please pay special attention to this information.

**NOTE** *This graphic indicates information regarding a condition that should be observed.*

**CAUTION** *This graphic indicates information regarding a condition that might result in damage to the vehicle.*

**⚠WARNING** *This graphic indicates information regarding a condition that might result in severe injury or death.*

# Your Pack Mule BC NXG or BCT NXG Vehicle

Your Pack Mule NXG vehicle is powered by the industry-leading AC-Power system and has been configured and outfitted according to your company's requirements. It is also available in different models, each designed to meet specific requirements. This manual covers the basics of each of the BC NXG or BCT NXG systems; however, you may find differences in the details shown here and your vehicle

The graphic below (Figure 1) provides an overview of the vehicle, as well as references to the pages in this document dealing with each of the parts.

**Cargo Deck**
The cargo capacity for each model can be found in Appendix C in the back of this manual.

**Instrument Panel**
On/Off Switch, Forward/Reverse Control, and Smart View Display (p. 5)

**Motor Compartments**
Beneath the removable cargo deck are the motor (p. 15), the charger (p. 13), and the motor controller (p. 15). The charging cord is also stored beneath the cargo deck.

The batteries (p. 10) are located under the seat. To access the batteries, grasp the seat back and tilt it forward.

*Figure 1*

# Safety Information

This manual has been designed to help the owner/operator operate the vehicle safely and according to the procedures and standards for which the vehicle was designed and intended for use. This section provides the essentials of safe operation. There is a more thorough discussion in Appendix A: Industry Standards.

## Training

Vehicle owners are responsible for making certain that appropriate personnel are fully trained in the safe operation of the vehicle and understand its characteristics and features, the operation of its controls, and safe driving practices. Those responsible for training operators should first become familiar with the conditions of the place where the vehicle will be operated in order to assess its effect on safe operation. Training should occur under the conditions of the operating environment while adhering to the safety guidelines and should include:

- Safety guidelines
- Safely operating vehicle in the work environment.
- Operation of all controls
- Safe driving practices
- A driving and operating test

## Operator Qualifications

Operators should be selected based on their ability to safely operate the vehicle, including vision, hearing, physical and mental capabilities. Operators must:

- Demonstrate a working knowledge of all controls
- Understand all safety guidelines
- Be able to properly drive and park the vehicle under usual working conditions
- Know how to properly load, unload and tow cargo
- Recognize maintenance problems

## Safety Guidelines

All Pack Mule vehicles are designed for use on smooth surfaces in and around industrial plants, warehouses, nurseries and greenhouses. They are not intended for use outdoors, up and down steep grades, or on public roads and highways.

Follow these guidelines for safe vehicle operation:

- Read this manual before operating the vehicle
- Read, understand and observe all labels affixed to the vehicle
- Do not operate vehicle without first checking the brakes
- Do not mount or dismount the vehicle when the key is in the ON position
- Do not drive the vehicle if the accelerator requires excessive pressure
- Do not park or operate the vehicle near flammable objects or in a flammable or hazardous environment
- Use only necessary power
- Keep both hands on the steering control while operating the vehicle
- Accelerate and decelerate slowly and in a controlled manner
- Always reduce speed when operating on poor terrain or in poor conditions
- Always maintain adequate distance between the vehicles, and people and obstacles
- Do not use the vehicle to push objects
- Do not allow the tires to lose contact with the ground
- Proceed around low overhangs with caution. Be sure there is enough clearance for the operator's head and the highest point of the vehicle or any attached accessories.
- Never abruptly change direction
- Always drive directly up an incline; never across
- Never exceed the designated load or towing capacity

On grades, it is possible for vehicles to coast at greater than normal speeds. To prevent loss of vehicle control and possible serious injury, speeds should be limited to no more than maximum speed on level ground.

Good common sense and prudent driving practices do more to prevent accidents and injuries than all of the warnings and instructions combined. Wesley International strongly suggests that the owner-operator read this entire manual paying particular attention to the CAUTIONS, SAFETY INFORMATION, and WARNINGS.

Wesley International LLC reserves the right to make design changes without obligation to make these changes on units previously sold, and the information contained in this manual is subject to change without notice.

## Loading and Unloading

Follow these guidelines when loading and unloading cargo:

- Turn the vehicle off while loading or unloading
- Do not exceed the maximum cargo capacity

- Carefully and evenly position all loads
- Secure cargo so that nothing can easily fall off of the vehicle
- Be extremely careful when carrying loads that extend beyond the vehicle's deck

## Towing

Follow these guidelines when towing:

- Turn the vehicle off and place directional selector in the center (neutral) position before attaching load to hitch.
- Ensure hitch is properly installed and secured (If the vehicle does not have a factory-installed hitch, the hitch is available from Wesley International.)
- Do not exceed the maximum towing capacity (The model's towing capacity is on the Vehicle Identification plate (Figure 2) and in Appendix C of this manual.)
- Do not exceed 5 mph when towing
- Take extreme care when towing down an incline
- Avoid sudden stops since the stop may cause the trailer to jackknife
- Keep in mind that heavy loads being towed may significantly increase stopping distances

## Maintenance

Always maintain your vehicle in accordance with the service schedule in this manual and keep complete records of the maintenance history of the vehicle. Ensure that maintenance personnel performing any service or repair work on the vehicle are properly trained and qualified. When performing any maintenance on the vehicle, disable the vehicle by removing the key from the key switch and disconnecting the battery cable.

**⚠WARNING**

**Untrained or unauthorized personnel should never attempt to perform service or maintenance on the vehicle. Improper maintenance can cause hazardous conditions. Contact Wesley International for authorized service assistance.**

Be sure to check the polarity of each battery terminal and rewire the batteries according to the schematic shown in this manual (p. 11, Figure 14). Never install a wire instead of a proper fuse, even for a temporary fix. It may cause extensive damage and possible fire. Do not use a screwdriver or other metal object to remove fuses. Doing so may cause an electrical short and damage the system. Do not modify or tamper with any part of the operating or speed control systems. All inspections and adjustments must be made by a qualified technician.

Use a dedicated circuit for each battery charger and do not plug other appliances into receptacles on the circuit while the batteries are charging.

**⚠WARNING**

**Always use insulated tools when working in the battery area. Improper tools may cause sparks or an explosion. Wear approved safety goggles or face shield.**

**The electrolyte in a lead acid battery is an acid solution which can cause severe burns to the body and eyes. Treat all spills to the body and eyes with extended flushing with clear water; then contact a physician immediately.**

**Electrolyte spills will corrode the vehicle's frame and body if not treated immediately. Wear proper protective clothing, gloves and eye wear. Thoroughly clean all areas with a neutralizing solution of ¼-cup (60 mL) sodium bicarbonate (baking soda) dissolved in 1½ gallons (6 L) of water.**

Always support the vehicle using wheel chocks and safety stands. Never get under a vehicle that is supported by a jack. Lift the vehicle in accordance with the instructions in this manual (p. 12).

Always test drive the vehicle after any repairs or maintenance in a safe area free of any other vehicles or pedestrians.

Wesley recommends that only OEM replacement parts be used. Using any parts other than those approved by Wesley may void the warranty.

## Ventilation

When performing any maintenance on the Pack Mule BC NXG or BCT NXG or charging the batteries, make sure that you are in a well-ventilated area. Hydrogen gas is generated in the charging cycle and is explosive in concentrations as low as 4%. Five air exchanges per hour is considered the minimum ventilation required.

**⚠WARNING**

**The battery charging cycle may generate highly explosive hydrogen gas. Make certain that the charging is done in a well ventilated area and is away from anything that might create sparks.**

# Operating Instructions

## Before Putting Your Vehicle in Service

- Check for leaking fluids (brake fluid, battery acid, or transaxle oil).
- Check condition of tires for defects or damage. If your vehicle is equipped with pneumatic tires, make certain that they are properly inflated.
- Check to ensure that wheel lugs are tight.
- Check to ensure that battery cables are tight and batteries are secure.
- Check the steering, brake, and electrical controls for proper operation.
- Charge the batteries.

## Vehicle Identification

*Figure 2: The Vehicle Identification Plate is located on the inside of the motor compartment. Please refer to this information when requesting warranty service, ordering replacement parts, or requesting service support from Wesley International.*

## Charging Batteries

The Onboard High Frequency Charger is standard on the Pack Mule NXG. To charge the vehicle's batteries, do the following:

- Position the vehicle in a well ventilated area within six feet of the charging outlet.
- Connect the vehicle's AC cord (Figure 3) to the outlet.
- Confirm the charging status on the LED display on the charger. (Figure 4)

If the vehicle has the optional Single-LED display, located near the key switch, it will display a solid green light when the batteries are fully charged.

**CAUTION**

**Extension cords must be a 3-wire cord no longer than 30m (100') at 10AWG or 7.5m (25') at 16 AWG per UL guidelines. Connect only one charger to a single 15A circuit or the circuit may become overloaded.**

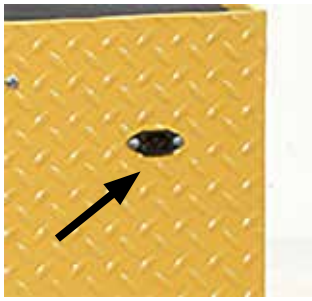

*Figure 3: The charging receptacle is located on the upper right side of the rear panel. The cord is stored beneath the cargo deck.*

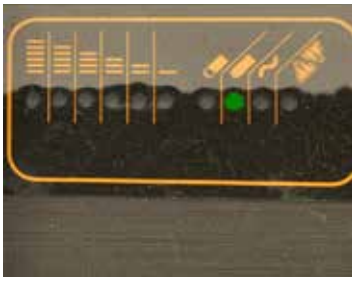

*Figure 4: The LED display on top of the charger indicates when the battery is completely charged. For a complete list of LED messages, see page 17.*

## Vehicle Controls, Meters, Switches

All of the controls are located on the panel in front of the operator. They are:

- The On/Off switch. The key switch is standard, but your vehicle may be equipped with a rocker switch, a Safe-T-Lock keypad or Perma-Key switch. The Perma-Key switch is similar to the standard key switch except that once the key is inserted, it cannot be removed.
- The FWD/NEUTRAL/REV directional selector switch.
- The Smart View Display (See page 6 for display information.)

*Figure 5: The instrument panel showing (1) the key switch, (2) the rocker on/off switch, (3) the directional selector switch, (4) the Smart View display, and (5) the horn button..*

The FWD/REV directional selector switch is a three-position rocker switch. Press the top section down for Forward and the bottom for Reverse. When neither the top nor bottom position is selected, the vehicle is in neutral. Always place the directional switch in neutral when the vehicle is parked or stationary or when leaving the vehicle.

**NOTE**

**The Safe Start feature prevents the vehicle from starting with a direction selected or if the accelerator is depressed. To start the vehicle, put the switch in the neutral positionm, remove your foot from the accelerator pedal, and turn the key on.**

## The Smart View Display

The Smart View display communicates directly with the onboard controller and displays important vehicle information when the key is switched on:

- Battery State of Charge (Displayed as a percentage of charge remaining.)
- Traction Hours
- System Fault Code (See page 17 for an explanation of the fault codes.)

*Figure 6: The Smart View Display*

## Horn

The horn, located on the side of the panel, sounds when you press the horn button. It will not sound when the key switch is in the "off" position.

## Accelerator/Brake

The pedal (Figure 7) located at the operator's right foot controls the travel speed of the vehicle, releasing the pedal activates some regenerative braking. Additional mechanical and regenerative braking is engaged using the brake pedal. Drive is inhibited when the brake pedal is depressed. The speed increases as the pedal is depressed, up to the limits set in the controller.

*Figure 7: The Accelerator/Brake Pedal. With the key switch turned to "On", and the directional switch at "Forward" or "Reverse, the pedal puts the vehicle in motion. When the pedal is released, the vehicle stops. .*

## Presence Switch

The standard seat presence switch ensures that the operator is properly positioned in the seat before the vehicle is put into motion. The vehicle may also be equipped with a left-foot presence switch. To move the vehicle either forward or backward, the operator must depress the switch. When the switch is released, the vehicle stops.

## Optional Equipment

Your Pack Mule NXG may be equipped with any of the following optional equipment:

**Headlights/Tail Lights:** These are controlled by a rocker switch located near the directional control.

**Parking Brake:** The vehicle may have an electronic or hand parking brake instead of the parking brake pedal. The electronic brake is automatically engaged when the motor stops.

**Programmable Security Switch:** Your vehicle may be equipped with the optional "SAFE-T-LOCK. The programmable switch prevents the unauthorized use of the vehicle and allows up to 99 authorized users. Instructions for programming the switch are found in Appendix B.

**Tow Hitch:** A manufacturer-approved tow hitch is required for towing a trailer. If the vehicle does not have the optional factory-installed tow hitch, hitches matching the vehicle's tow ability are available from Pack Mule.

**The Back-up or Proximity Alarm:** The back-up alarm sounds continuously when the direction selector switch is set to reverse. The proximity alarm sounds continuously when the direction selector switch is set to either forward or reverse.

## Driving the Pack Mule NXG

The Pack Mule vehicle is designed to be simple to use. However, for safe operation, the operator must practice appropriate operating techniques, as outlined below. This list assumes that the daily maintenance schedule (p. 8) has been followed.

1. Make certain that the battery charger AC cord is unplugged and properly stored. The vehicle control is interlocked so that the vehicle will not move when the on-board charger is plugged in.
2. Check the surrounding area to make sure that it is clear of obstruction and make certain that the cargo is properly loaded and secured.
3. Make sure that you are properly positioned in the seat. Your right foot will operate the accelerator/brake pedal and your left foot will activate the foot presence switch (if present). Move the directional switch to the neutral position.
4. Turn the vehicle on by turning the Off/On switch to the "On" position.
5. Check the BDI display for the battery and system status.
6. Set the directional switch to the desired direction. If the accelarator is depressed while the directional switch is set to "Neutral," the Smart View Display will show a fault. To clear the fault, remove foot from accelerator pedal. Set the directional switch to desired direction.
7. Engage the left-foot presence switch (if present) with the left foot.
8. Gradually press the accelerator pedal. The speed of the vehicle, up to the limit set by the controller, is determined by the amount of pedal travel.
9. To stop, remove your foot from the accelerator/brake pedal.

## Parking

- Set the directional switch to the neutral position.
- Set the key switch or rocker switch to "Off."
- Apply the parking brake and depress the brake pedal as needed.
- If parking on an incline, turn the front wheels into the curb to prevent accidental movement.

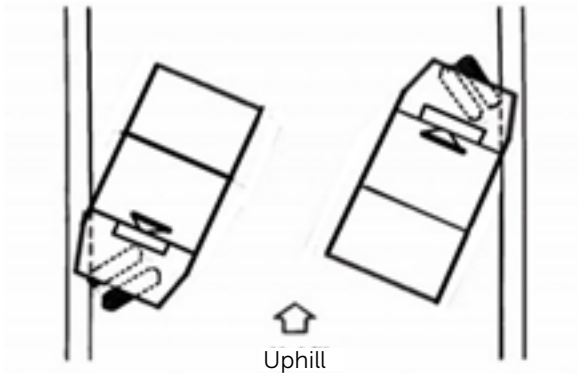


*Figure 8 Proper positioning of the Pack Mule's front wheels when parking on an incline.*

## Driver Assist on Inclines

Unlike other electric utility vehicles, the Pack Mule NXG has a controller that seamlessly applies the regenerative brakes to limit speeds on descending inclines and provides additional power as needed on ascending inclines.

**⚠WARNING**

**Although the Pack Mule NXG provides automatic regenerative braking on inclines, operators should be alert to vehicle and load instability on unlevel surfaces.**

## Start-up Checklist

Below is a sample checklist of tasks to be performed each day before the vehicle is put into service. It covers the daily maintenance in the maintenance list found on the next page.

Truck No. _____ Operator _____ Date _____

| Visual | OK | Fix |
|---|---|---|
| Obvious Damage | | |
| Cracked Frame Welds | | |
| Model Tag Readable | | |
| Tires Properly Inflated and Cut Free | | |
| Fluid Leaks | | |
| Charging Cord Unplugged | | |
| Wire Insulation Undamaged | | |
| Battery Connections Clean and Secure | | |
| Battery Water Level | | |
| Steering | | |
| Brakes | | |
| Horn (Switch must be turned on.) | | |
| Battery Discharge Indicator | | |
| Switch in OFF position if leaving vehicle | | |

**Comments:**

**⚠WARNING**

**To prevent unexpected movement on start-up, make certain that the directional switch is in the NEUTRAL (center) position when leaving the vehicle.**

**NOTE**

After completing the inspection, the operator should turn the form in to the supervisor, who should keep the form on file for thirty days.

## Maintenance Schedule

The Pack Mule NXG vehicle is virtually maintenance free in its standard configuration. It has a sealed AC motor with no brushes to be replaced, and the transaxle is sealed and does not require periodic lubrication. The list belows what should be done monthly, Bi-Annually (or at 125 hours of operation), and Annually (or at 250 hours of operation). Operating hours are shown on the display on the instrument panel.

| Service | Monthly | Bi-Annual | Annual |
|---|---|---|---|
| 1. Check operation of all gauges, horn, and lights. | ✓ | ✓ | ✓ |
| 2. Check BDI for battery state of charge. | ✓ | ✓ | ✓ |
| 3. Charge batteries when vehicle is not in service. Charge overnight up to 8 hours. | ✓ | ✓ | ✓ |
| 4. Check tires for damage, excessive wear, and cold pressure. | ✓ | ✓ | ✓ |
| 5. Check wheels for bent rims, missing or loose lug nuts. | ✓ | ✓ | ✓ |
| 6. Check battery for correct electrolyte level. | ✓ | ✓ | ✓ |
| 7. Check for loose steering. Adjust as required. | ✓ | ✓ | ✓ |
| 8. Clean batteries and terminals with a solution of ¼ cup (60 mL) baking soda to 1½ gallon of water. Tighten terminals and coat with anti-corrosion compound. | ✓ | ✓ | ✓ |
| 9. Inspect brake system linkages, brake linings and other components for wear and adjustment. | | ✓ | ✓ |
| 10. Check specific gravity of all battery cells using hydrometer. | | ✓ | ✓ |

**Notes:**

1. *In freezing temperatures recharge the batteries after adding distilled water to make sure that the water mixes with the electrolyte properly. Otherwise the water may freeze and damage the batteries.*
2. *Pneumatic tire recommended tire pressure is 60 psi for LRB tires and 90 psi for LRC tires. Improper tire inflation may reduce tire life and adversely affect vehicle handling. It may also lead to sudden tire failure, resulting in a loss of vehicle control.*
3. *A hydrometer, measuring the specific gravity of the electrolyte, is used to determine if a battery is properly charged. With a fully charged battery, the reading should be about 1.260; fully discharged it should be about 1.100.*
4. *The transaxle is sealed and does not require routine maintenance.*

# Maintenance Instructions

## Routine Maintenance

Before performing any maintenance or repair work on the vehicle, isolate the batteries from the motor and electronics by removing the 10-amp fuse. (Figure 10) When finished, replace the fuse .

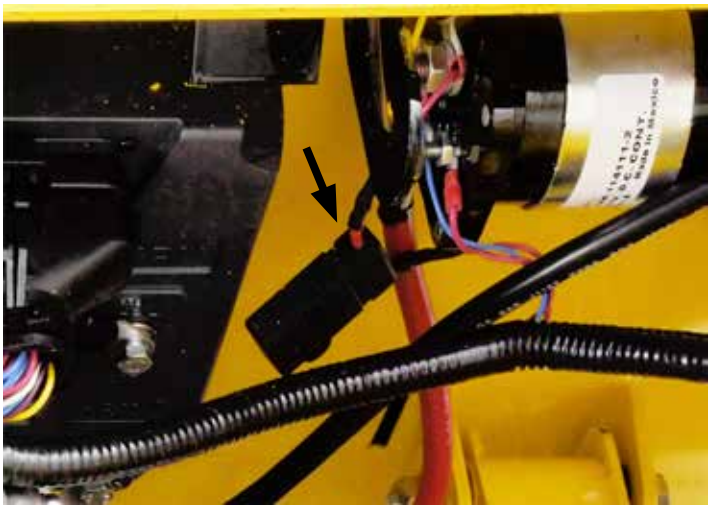

*Figure 9 The fuse (indicated by the arrow) should be removed before performing any maintenance or repair work on the electrical system.*

## Batteries

The standard batteries used in the Pack Mule are lead acid, 6-volt, deep cycle, golf-cart style. Other battery types are available.

**⚠WARNING**

**Always observe the following warnings when working on or near batteries:**

**Keep all smoking materials, open flames, or sparks away from batteries. Any flame or spark might cause an explosion.**

**Do not charge batteries in areas without adequate ventilation. Small concentrations of hydrogen gas are enough to cause an explosion.**

**Make sure that the key or rocker switch is in the "Off" position, all electrical accessories are off, and the circuit breaker is in the open position (Figure 12) before working on the vehicle.**

**The electrolyte in a lead acid battery is an acid solution that can cause severe burns to the skin and eyes. If you come into contact with the electrolyte, flush the area with plenty of clear water and contact a physician immediately.**

**Always use properly insulated tools when working on electric vehicles. Properly insulated tools will help to prevent electrical shock that can result in equipment damage, severe personal injury or even death.**

*Figure 11: The major components of the electrical system. They are (1) motor, (2) controller, (3) coil (with fuse) and (4) batteries.*

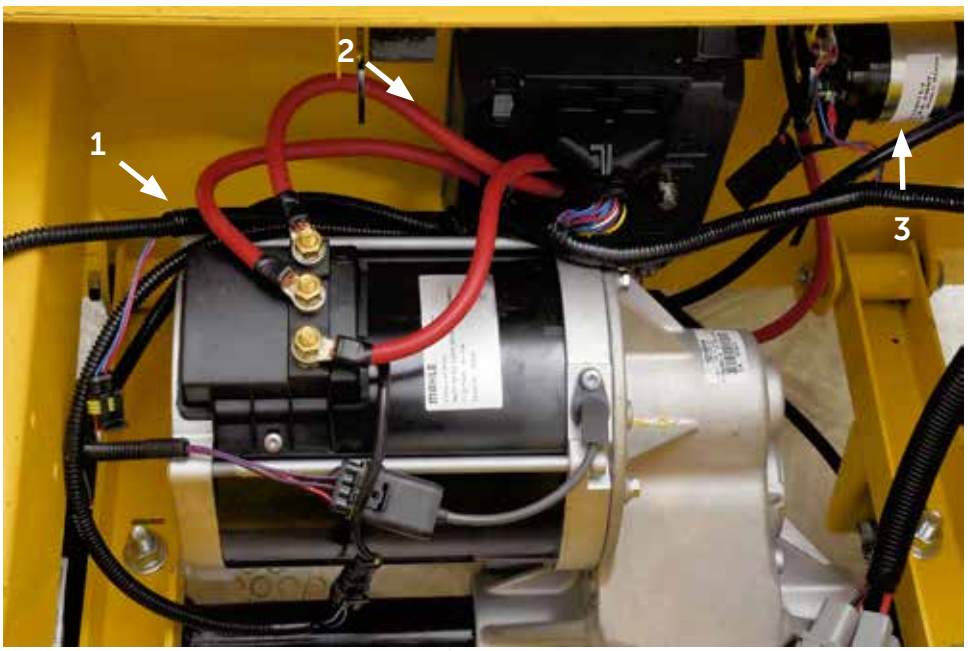

## Battery Care

The useful life of the batteries installed in the Pack Mule NXG vehicle will be longer if they are properly cared for. Keep the following in mind:

- Place battery into service and complete a full discharge and charge cycle. Check the electrolyte level, and add approved water (never acid) if needed after this first cycle is completed.
- Never discharge the battery beyond 80%, and do not use the battery if the specific gravity falls below 1.150.
- During shipment or prolonged storage, the electrolyte levels may fall below the separator protector. Keep electrolyte levels above the separator and 1/8" (3.175mm) below the vent well. Water batteries only as required and after a complete charge and discharge cycle.
- Use only distilled or purified water, free of contaminants. (Contaminants in water may reduce the chemical reaction causing a reduction in battery life.)
- Be sure to replace the vent caps after watering to prevent electrolyte from spilling out.
- Keep the battery top clean and dry, and the vent caps tightly sealed.
- Keep open flame and metal objects away from the battery top.
- Keep the battery compartment open and well ventilated during the charging cycle.
- Charge batteries after each day's use.

## Electrolyte Levels

The electrolyte levels should be carefully monitored and maintained ½" (13mm) above the plates in each cell. If the electrolyte level is too low, the plates will be exposed to air and ruined beyond repair. If it is too high, the electrolyte will be forced out of the battery during the charge cycle.

## Optional Battery Watering System

Pack Mule offers battery watering systems as an option for the Pack Mule NXG. This system provides a fast, accurate, and safe way to maintain precise battery electrolyte levels.

## Cleaning Batteries

For efficient operation, the battery tops and terminals should be kept clean. The tops should be kept free of dirt and debris.

Clean the batteries using a solution specifically formulated to neutralize battery acid deposit or a solution of sodium bicarbonate (baking soda) and water. Mix ¼ cup (60 mL) of sodium bicarbonate with 1½ gallons (6 L) of water. Apply the solution to the top and sides of the batteries and allow the solution to sit for three minutes. Thoroughly rinse the area with low-pressure, clear water.

## Battery Replacement

**⚠WARNING**

**Care should be taken in removing and replacing batteries. Each battery weighs approximately 70 pounds. Lifting the battery without using appropriate equipment may cause injury.**

To remove the battery, remove the 10-amp fuse (Figure 10), remove the hold-down clamps and interconnected cables. Ensure that the battery fill caps are securely attached. Then attach the lifting device and remove the battery.

## Connecting the Batteries

All configurations (24 v, 36 v and 48 v) of the Pack Mule batteries are connected in series as shown in Figure 12. The red wire is connected to the battery positive input connection, the remainder of the batteries are connected negative to positive, and the black wire is attached to the last battery's negative connection. According to the voltage, your vehicle may have eight batteries instead of six; however, the series connection is the same.

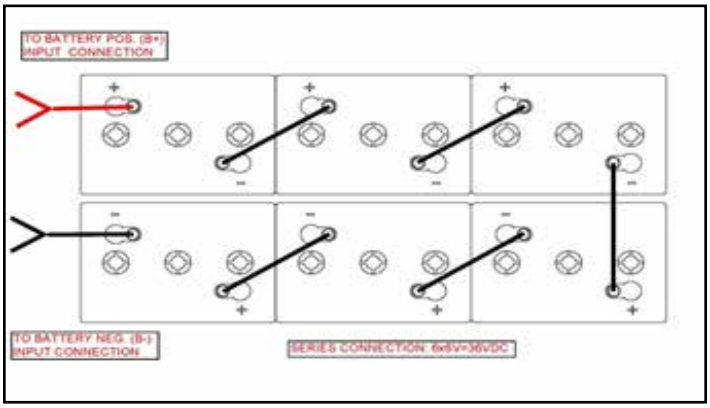


*Figure 12: The batteries connected in series.*

Vehicles with on-board chargers have a temperature sensor attached to the negative terminal to prevent overheating during recharge.

**CAUTION**

**Always wear proper safety equipment, including safety goggles or a face shield when working around batteries.**

**To protect against personal injury or equipment damage, always use insulated tools when working on an electric vehicle**

## Lifting the Vehicle

Lifting the front: To remove a front wheel or axle: First chock the front and rear of the rear tires. Loosen the front wheel hardware. Position the jack in the location indicated in Figure 13 below and carefully raise the front of the vehicle, taking care that the rear wheels do not move. Position jack stands in the locations indicated and slowly lower the vehicle to rest on the jack stands and test the stability of the vehicle.

Lifting the rear: To remove a rear wheel or axle, first raise the front of the vehicle as previously described and support on jack stands. Then position the jack in the position indicated at the rear of the vehicle. Carefully raise the rear of the vehicle with the jack and place two jack stands in the positions indicated. Slowly lower the vehicle to rest on the jack stands and test the stability of the vehicle. Lower the vehicle by reversing the lifting sequence.

The vehicle may be lifted with an overhead crane and J-Hooks. The J-hooks should be attached to the frame at the four corners of the battery/engine compartment. The crane capacity should be greater than 1200 lbs (standard battery) or 1500 lbs (industrial battery). Do not work under the machine when hoisted by a crane.

*Figure 13: Position the jacks or jack stands*

**⚠WARNING**

**Do not lift the vehicle on unlevel or unstable surfaces. When lifting the vehicle to jack stands, always lift and secure the front of the vehicle first. If the rear of the vehicle is lifted first, the front may become unstable.**

## Tires and Wheels

Your Pack Mule vehicle may be equipped with any one of the following types of tires:

- Pneumatic (standard)
- Solid
- Soft Solid
- Solid Non-Marking (off-white)

Although all of these should be inspected periodically, only the pneumatic tires require maintenance. Make certain that the tire pressure is maintained at 60 psi for LRB tires and 90 psi for LRC tires.

Changing the vehicle's tires is very much like changing an automobile tire. Follow the procedure below to change the tire safely.

1. Position the jack in the proper position (Figure 13)
2. Loosen the lug nuts on the wheel to be changed.
3. Raise the jack until the tire is clear of the surface.
4. Remove the tire.

To replace the tire, reverse the procedure, tightening the lug nuts to 85 ft. lbs. (116 Nm) torque.

## Brakes

The vehicle is equipped with a pair of rear mechanical drum brakes which only engage for parking and/or emergency stopping. Normal braking uses the regenerative braking controlled by the combination accelerator/brake pedal.

Mechanical brakes are adjusted by advancing the two nuts on the central rod until the slop disappears. Brake wear may cause the need for a repeat adjustment. Do not over tighten.

*Figure 14: To adjust the mechanical drum brakes, advance the two nuts on the central rod (indicated by the arrow)..*

# Electrical Components

## Onboard Battery Charger

Your Pack Mule NXG is equipped with an onboard Delta-Q Battery Charger. The charger is air-cooled with no moving parts, providing dependable charging with little maintenance. To assure continued trouble-free operation, you should be aware of the following:

- The cooling fins on the charger should be checked regularly, making sure that they are free of dirt, dust, and other contaminants.
- The charger is designed to operate in environments between -30°C (-22°F) to 50°C (122°F).
- Do not expose the charger to oil, mud, or heavy water spray when cleaning the vehicle.

**Ammeter**

- If solid: displays scale of output during bulk phase.
- If flashing: Output has been reduced due to high internal charger temperature. Displays charge profiles 1-6 for 11 seconds if no battery is present.

**Fault Indicator (Red Light)**

- Charger error. Count the number of flashes between pauses and refer to the troubleshooting information in the table below.

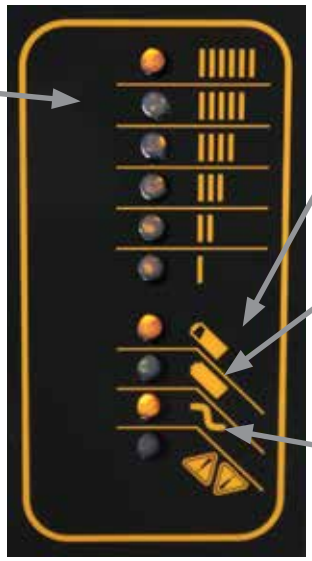

**Bulk Charge Indicator**

- If solid: Bulk charge phase complete (80% charge); in absorption phase.
- If flashing: Displays charge profile number if no battery is connected.

**Charge Completion Indicator (Green Light)**

- If solid: Charging complete and maintenance mode is active.
- If flashing: Absorption phase complete, in finishing phase.

**AC Indicator**

- If solid: AC power is present.
- If flashing: Low AC voltage. Check electrical source and cord length.

### Troubleshooting Instructions

If a fault occurs, count the number of flashes between pauses and refer to the table below.

| Flashes | Cause | Solution |
|---|---|---|
| 1 | Battery high voltage | Check battery size and condition. This fault will clear automatically once the condition has been corrected. |
| 2 | Battery low voltage | Check battery size and condition. This fault will clear automatically once the condition has been corrected. |
| 3 | Charge timeout caused by the battery pack not reaching the required voltage or charge | Check connections, that battery type matches the selected charge profile and operate the charger at a lower ambient temperature. Reset the charger by interrupting the AC for at least 15 seconds. |
| 4 | Battery could not be trickle charged up to minimum voltage. | Check for shorted or damaged cells. Reset the charger by interrupting the AC for at least 15 seconds. |
| 5 | Charger shutdown due to high internal temperature | Ensure sufficient cooling airflow. Reset the charger by interrupting the AC for at least 15 seconds. |
| 6 | Internal charger fault | Reset the charger by interrupting the AC for at least 15 seconds. If fault persists, it is likely the charger will need to be replaced. |

## Onboard Battery Charger (continued)

If the detachable input power supply cord set is damaged, replace with a cord that is: (for North America) UL or CSA listed/approved detachable cord, 3 conductor, 16AWG minimum, and rated SJT; terminating in a grounding type IEC 60320 C14 plug rated 250V, 13A minimum; or (for all other countries) a safety approved detachable cord, 3 conductor, 1.5mm$^2$ minimum, rated appropriately for industrial use. The cord set must be terminated on one end with a grounding type input connector appropriate for use in the country of destination and, on the other end, an output grounding type IEC 60320 C14 plug.

Extension cords must be 3-wire cord no longer than 30m (100') at 10AWG or 7.5m (25') at 16AWG per UL guidelines.

Connect only one charger to a single 15A circuit or the circuit may become overloaded.

### ⚠WARNING

**Charger enclosure may be hot during charging. Use hand protection if handling the charger while charging.**

### ⚠WARNING

**To prevent risk of electric shock, observe the following cautions:**

**Connect charger power cord to an outlet that has been properly installed and grounded in accordance with all local codes and ordinances. A grounded outlet is required to reduce risk of electric shock. Do not use ground adapters or modify the plug.**

**Do not touch uninsulated portion of output connector or uninsulated battery terminals. Disconnect the AC supply before making or breaking the connections to the battery.**

**Do not open or disassemble charger. Do not operate this charger if the AC supply cord is damaged or if the charger has received a sharp blow, been dropped, or otherwise damaged in any way. Refer all repair work to the manufacturer or qualified personnel.**

**This appliance is not intended for use by persons (including children) with reduced physical, sensory or mental capabilities, or lack of experience and knowledge, unless they have been given supervision or instruction concerning use of the appliance by a person responsible for their safety.**

### Optional Single LED Display

If the optional single-LED display is included, it will be located on the front panel, near the key switch.

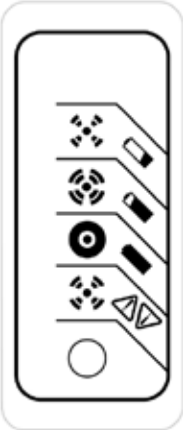

| LED Colour | | Indication (following "Power-On Self Test") | |
|---|---|---|---|
| Green | | **Solid:** | Charging complete. Charger in Maintenance Mode. |
| | | **Flashing:** | *Short:* <80% Charge.<br>*Long:* >80% Charge.<br>*When battery is not connected:* Algorithm Number display. |
| Amber | | **Flashing:** | Reduced Power Mode: Low AC Voltage or High internal charger temperature. |
| Red | | **Flashing:** | Charger error. Reset charger power and refer to Troubleshooting Instructions. |

## Motor

Your Pack Mule NXG vehicle is equipped with an AC motor system. (Figure 15) This motor requires no periodic maintenance since it has no brushes to be replaced.

*Figure 15: The motor connected to the Sevcon motor controller.*

## Motor Controller

There are no usable serviceable parts in the Sevcon motor controller. However, it is recommended that the controller be kept clean and dry to protect it against corrosion and possible electrical control problems created by dirt, grime, and chemicals that are part of the operating environment and that normally exist in battery powered systems.

Use the cleaning procedure below for routine maintenance:

1. Remove power by disconnecting the battery.
2. Discharge the capacitors in the controller by connecting a load (such as a connector coil or a horn) across the B+ and B- terminals.
3. Remove any dirt or corrosion from the connector areas. The controller should be wiped clean with a moist rag. Dry it before reconnecting the battery. The controller should not be subjected to pressured water flow from either a standard hose or a power washer.
4. Make sure the connections are tight, but do not overtighten them.

**CAUTION**

**No attempt should be made to open, repair, or otherwise modify the controller. Doing so may damage the controller and will void the warranty.**

## Programmable Parameters

Programmable parameters allow the vehicle's performance characteristics to be customized to fit the specific vehicle application or environment. Pack Mule vehicles are programmed with standard default parameter settings. The five parameters listed below have the most effect on vehicle behavior and can be adjusted with the available hand-held programmer.

- Acceleration Rate
- Deceleration Rate
- Throttle
- Maximum Forward Speed
- Maximum Reverse Speed

Acceleration Rate: The time it takes the controller to accelerate from 0% drive output to 100% drive output. A larger value represents a longer acceleration time and a gentler start.

**Deceleration Rate:** The time it takes the controller to reduce its output when the throttle is reduced or released. A lower value represents a faster deceleration and thus a shorter stopping distance.

**Throttle Map:** The control will match the vehicle speed according to the pedal depression up to the maximum speed programmed into the controller.

**Maximum Forward Speed:** The maximum forward speed parameter defines the maximum controller voltage output at full throttle in the forward direction.

**Maximum Reverse Speed:** The maximum reverse speed parameter defines the maximum controller voltage output at full throttle in the reverse direction.

The factory settings for these parameters are:

- Accelaration Rate: 700 rpm
- Decelaration Rate: 675 rpm
- Throttle Map: 50
- Maximum Forward Speed: (Approximately 8 mph) BC: 2030 rpm. BCT: 2775 rpm
- Maximum Reverse Speed: (Approximately 3.5 mph) BC: 1015 rpm BCT: 1390 rpm

## Diagnostics and Troubleshooting

The Pack Mule NXG vehicle has on-board diagnostics that facilitate troubleshooting. When the controller senses a fault, either when the vehicle is switched on or is operation, it shows a fault code. (Figure 18). If the Smartview Display is damaged or otherwise inoperable, the fault code can be read directly from the controller by counting the number of consecutive LED flashes. The fault codes and LED codes are shown in the charts on pages 17 and 18.

There are five categories of faults. Below are the categories, the letter or letters identifying them in the table, and the action taken by the controller when sensing the fault.

1. **Information (I)** Information faults do not require immediate action, although some cutback in power may occur.
2. **Drive-inhibit (D)** Neutral brakes or coasts the traction motor to a stop. The fault prevents the operator initiating drive, but does not inhibit braking functions.
3. **Severe (S)** Immediate shut down of the system.
4. **Very Severe (VS)** Immediate shut down of the system.
5. **Return to Base (RTB)** Immediate shutdown of the system.

*Figure 18: The Smart View display indicating a fault.*

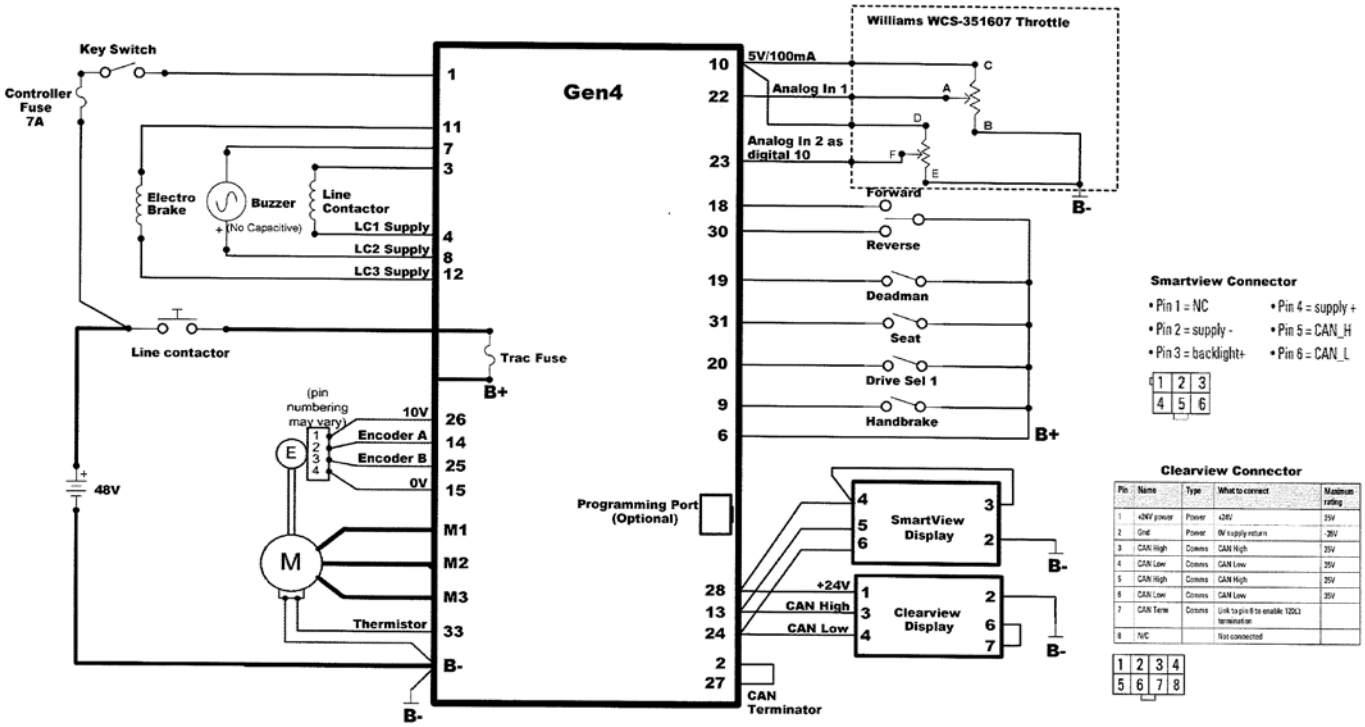


*Figure 17: Typical Controller wiring configuration.*

## Fault Codes and Troubleshooting Chart

| LED Code | Smart View Fault Code | Fault Category | Possible Cause | Fault Clearance |
|---|---|---|---|---|
| 2 | F12001 | 1 | Handbrake is on when direction is selected. | Disengage handbrake. |
| 5 | F15001* | | | |
| 5 | F15002* | | | |
| 5 | F15003* | | | |
| 5 | F15004* | | | |
| 5 | F15005 | 1 | Isolation fault detected between logic and power frame. | Check isolation between low and high voltage circuits |
| 5 | F15006 | 1 | No motor speed feedback from motor. | Check encoder wiring and speed measurement signal. |
| 5 | F15007 | 1 | Tow mode has been activated. | Disable tow mode if not required. |
| 5 | F15008 | 1 | Invalid steer sensor state | Check steer sensor wiring |
| 5 | F15009 | 1 | Pulsed enable signal not present, unable to enable bridge. | Check 1kHz pulsed enable signal is received |
| 5 | F15010 | 1 | Unable to complete power-on checks to allow bridge to enable. | Check motor connected or wait for motor to slow down. |
| 5 | F15011 | 1 | MOSFET/IGBT s/c tests at power up are being held off. | Check motor connected or wait for motor to slow down. |
| 5 | F15012 | 1 | Battery electrolyte Low Level detected | Check battery electrolyte level |
| 5 | F15013 | 1 | Battery electrolyte Low Level detected and cut back. | Check battery electrolyte level |
| 5 | F15014* | 1 | | |
| 6 | F16001 | 1 | Warning level throttle fault. Used on Renault Twizy. | Check throttle wiring and installation. |
| 6 | F16002 | 1 | Throttle appears to be stuck. This fault will clear if throttle starts to work again. | Check throttle wiring and installation. |
| 6 | F16003 | 1 | Throttle appears to be stuck. This fault will latch and can only be cleared by repairing the throttle and recycling power. | Check throttle wiring and installation. |
| 6 | F16004 | 1 | Contactor driver over current | Ensure contactor doesn't exceed maximum current and check contact wiring |
| 6 | F16005 | 1 | Contactor driver not working | Internal hardware fault. |
| 6 | F16006 | 1 | Contactor driver over temperature. | Ensure contactor doesn't exceed maximum current and check contact wiring |
| 6 | F16007 | 1 | Contactor driver unable to achieve current target in current mode | Ensure contactor driver current target is within range. |
| 6 | F16008 | 1 | Contactor driver MOSFET short circuit dete | Internal hardware fault. |
| 6 | F16009 | 1 | Analog supply is >10% out of range. | |

## Fault Codes and Troubleshooting Chart (continued)

| LED Code | Smart View Fault Code | Fault Category | Possible Cause | Fault Clearance |
|---|---|---|---|---|
| 6 | F16009 | 1 | Analogue supply is >10% out of range. | Remove short. Check output voltage. |
| 6 | F16010 | 1 | Seat regen settings applied. | Close the seat switch and recycle the direction to remove the seat regen settings. |
| 6 | F16011 | 1 | Customer specific fault. Shown when analogue footbrake voltage does not match digital footbrake switch state. | Check footbrake wiring and installation. |
| 7 | F17001 | 1 | BDI remaining charge is less than BDI warning level. | Charge battery |
| 7 | F17002 | 1 | BDI remaining charge is less than BDI Cutout level | Charge battery |
| 7 | F17003 | 1 | Battery voltage is less than Under Voltage limit for longer than protection delay. | Charge battery |
| 7 | F17004 | 1 | Battery voltage is greater than Over Voltage limit for longer than protection delay. | Charge battery |
| 7 | F17005 | 1 | Capacacitor voltage is greater than rated maximum voltage for longer than protection delay. | Charge battery |
| 7 | F17006 | 1 | Battery voltage is less than rated minimum voltage for controller for longer than 1s.** | Charge battery |
| 7 | F17007 | 1 | Battery voltage is greater than rated maximum voltage for longer than 1s. | Charge battery |
| 7 | F17008 | 1 | Capacitor voltage is greater than rated maximum voltage for longer than 1s. | Charge battery |
| 7 | F17009 | 1 | Motor control has entered low voltage cutback region. | Charge battery |
| 7 | F17010 | 1 | Motor control has entered high voltage cutback region. | Charge battery |
| 7 | F17011 | 1 | Mains Under Voltage | Check Mains Supply |
| 7 | F17012 | 1 | Mains Over Voltage | Check Mains Supply |
| 7 | F17013 | 1 | The voltage applied to the KL15/30 is below the controller | Check KL15/30 supply voltage |
| 7 | F17014 | 1 | Vcap is NOT >7/8 Vkey | Charge battery |
| 8 | F18001 | 1 | Low heatsink termperature has reduced power to motor | Allow controller to warm up to normal operating temperature. |

***This fault is commonly seen at power down.*

## Fault Codes and Troubleshooting Chart (continued)

| LED Code | Smart View Fault Code | Fault Category | Possible Cause | Fault Clearance |
|---|---|---|---|---|
| 8 | F18002 | 1 | High heatsink temperature has reduced power to motor | Allow controller to cool down to normal operating temperature. |
| 8 | F18003 | 1 | High measured or estimated motor temperature has reduced power to motor. | Allow motor to cool down to normal operating temperature. |
| 8 | F18004 | 1 | Low measured temperature has reached -30 degrees. | Check motor thermistor connection or allow motor to warm up. |
| 10 | F10101 | 1 | Controller is in pre-operational state. | If configured and ready for use, change state to operational. |
| 10 | F10102 | 1 | Controller has not received all configured RPDOs at power up. | Check PDOs on all CANbus nodes are configured correctly and match up. |
| 10 | F10103 | 1 | One or more configured RPDOs not received within 3s of start up or 500 ms during normal operation | Check status of all nodes on CANbus. Check PDOs on all CANbus nodes are configured correctly and match up. |
| 11 | F11101 | 1 | Encoder is not aligned properly. | Ensure encoder offset is correctly set or re-align encoder |
| 11 | F11102 | 1 | SinCos Encoder Min Max values are heading towards a voltage rail or converging together. | Thermal or mechanical variation is causing the sincos encoder to deviate from the cold factory commissioned values |
| 11 | F11103 | 1 | A fault ride-through event has been encounter, but operation is allowed to continue although the system may be derated. | None |
| 11 | F11104 | 1 | The open loop V/f induction motor software has detected a pulled-out condition (applied frequency much larger than actual). It will automatically attempt to restart. | Reduce load torque transients and demanded accelaration rates. Check motor parameters (V/f ratio and current limit/allowed torque may too low) and control gains. |
| 11 | F11105 | 1 | Stator resistance thermal compensation has failed due to the estimated value being too different from the configured value. | Check the value of Rs configured in the controller is correct for the motor. |
| 11 | F11106 | 1 | Encoder PLL has turned off due to poor tracking. | Check PLL gains and encoder setup and wiring. |
| 12 | F12101 | 1 | Vehicle is operating in reducd power mode as some CAN messages are not being received. (Renault only) | Check status of nodes on CANbus expected to be transmitting data. |

## Fault Codes and Troubleshooting Chart (continued)

| LED Code | Smart View Fault Code | Fault Category | Possible Cause | Fault Clearance |
|---|---|---|---|---|
| 13 | F13101 | 1 | This warning is set if any task has between 10% and 20% of its stack free | |
| 13 | F13102 | 1 | An internal logic supply rail has gone out of range. | |
| 14 | F14101 | 1 | EMCY message received from non-Sevcon node and anonymous EMCY level is set to 1. | Check status of non-Sevcon nodes on CANbus. |
| 14 | F14102 | 1 | | |
| 14 | F14103 | 1 | | |
| 15 | F15101 | 1 | Vehicle service next due time has expired (if supported). If supported, service driveability profile will activate. | Service vehicle and reset service hours counter. |
| 2 | F22001 | 2 | Valid direction selected with operator not seated or operator is not seated for a user configurable time in driver. | Must be seated with switches inactive. |
| 2 | F22002 | 2 | Both the forward and reverse switches have been inactive simultaneously for greater than 200 ms. | Check vehicle wiring and reset switches. |
| 2 | F22003 | 2 | FS1 active for user configurable delay without a direction selected. | Deselect FS1. |
| 2 | F22004 | 2 | Any drive switch active at power up. | Deselect all drive switches |
| 2 | F22005 | 2 | FS1 active after a direction change and FS1 recycle function enabled. | Deselect FS1. |
| 2 | F22006 | 2 | Inch switch active along with any drive switch active, seat switch indicating operator present or handbrake switch active. | |
| 2 | F22007 | 2 | Vehicle overloaded | Remove overload condition |
| 2 | F22008* | 2 | | |
| 2 | F22009* | 2 | | |
| 2 | F22010 | 2 | Traction function inhibited using traction inhibit switch. | Deselect traction inhibit. |
| 2 | F22011 | 2 | Vehicle changed from traction mode to pump mode (or vice-versa) when direction selected. | Deselect all drive switches. |
| 2 | F22012* | 2 | | |
| 2 | F22013* | 2 | | |
| 2 | F22014 | 2 | Fault with momentary direction selection switch. | Release momentary direction switch |

## Fault Codes and Troubleshooting Chart (continued)

| LED Code | Smart View Fault Code | Fault Category | Possible Cause | Fault Clearance |
|---|---|---|---|---|
| 2 | F22015 | 2 | Sensorless has failed to start up. | |
| 5 | F25001* | | | |
| 5 | F25002 | 2 | An issue has occurred with the PST unit. | Check PST Unit |
| 6 | F26001 | 2 | Throttle value is greater than 20% at power up. | Release throttle |
| 6 | F26002 | 2 | Wire-off detected in electrobrake circuit. | Check electrobrake wiring, ensuring current flows when energized. |
| 6 | F26003 | 2 | Direction is changed and vehicle speed is greater than allowed. | Select neutral switch to clear the fault. |
| 7 | F27001 | 2 | Measured ORFET voltage differs too much from measured output voltage. | Check vehicle wiring. |
| 7 | F27002 | 2 | Controller has entered thermal or voltage cutback region. | Check for temperature or voltage cutback condition and take appropriate action. |
| 8 | F28001 | 2 | Thermal or voltage cutback factors have reduced below user-defined levels. | Check for temperature or voltage cutback condition and take appropriate action. |
| 10 | F20101 | 2 | One or more configured RPDOs not received within 3s at start up or 500ms during normal opera-tion. | Check status of all nodes on CANbus. Check PDOs on all CANbus nodes |
| 12 | F22101* | 2 | | |
| 12 | F22102* | 2 | | |
| 12 | F22103 | 2 | Vehicle application subsystem is not receiving control or status information. | Check CANbus wiring and configuration of J1939 signal mapping. |
| 12 | F22104 | 2 | Controller failed to receive re-quired CAN messages. | Check CANbus wiring and CAN network. |
| 12 | F22105 | 2 | A message has been lost in the CAN protocol. | Check CANbuswiring. |
| 12 | F22106 | 2 | A message has been lost in the CAN protocol. | Check CANbuswiring. |
| 12 | F22107 | 2 | A signal in a message has been invalid for 5 cycles. | Check CANbuswiring. |
| 12 | F22108 | 2 | A signal in a message has been invalid for 5 cycles. | Check CANbuswiring. |
| 14 | F24101 | 2 | EMCY message received from non-Sevcon node and anonymous EMC level. | Check status of non-Sevcon nodes on CANbus. |
| 14 | F24102 | 2 | Boost enable state from hardware and processor comms does not match. | Check DCDC unit. |
| 14 | F24103 | 2 | Boost stage is above maximum operating voltage. | |

## Fault Codes and Troubleshooting Chart (continued)

| LED Code | Smart View Fault Code | Fault Category | Possible Cause | Fault Clearance |
|---|---|---|---|---|
| 14 | F24104 | 2 | DC input voltage is under the specified minimum. | Check battery. |
| 14 | F24105 | 2 | DC input voltage is over the specified maximum. | Check battery |
| 14 | F24106 | 2 | Output voltage is over the specified maximum. | Check vehicle wiring. |
| 1 | F31001* | 3 | | |
| 2 | F32001* | 3 | | |
| 4 | F34001* | 3 | | |
| 4 | F34002* | 3 | | |
| 4 | F34003* | 3 | | |
| 4 | F34004 | 3 | Time to close breaker on GpAC has expired. | Cycle power and restart breaker close sen |
| 5 | F35001 | 3 | Motor isolation contactor is open circuit. | Check isolator contactor and wiring |
| 5 | F35002 | 3 | Motor terminal is open circuit or disconnected from controller | Check motor wiring. Check controller condition. |
| 5 | F35003 | 3 | No speed feedback from motor. | Check encoder wiring and speed measurement signal. |
| 7 | F37003 | 3 | Battery voltage has dropped below critical level. | Check controller voltage supply. |
| 10 | F30101 | 3 | One or more configured RPDOs not received within 3s at start up or 500ms during normal operation. | Check status of all nodes on CANbus |
| 11 | F31101 | 3 | Controller is unable to control a current in the field winding. | Check field is wired to correct terminals. |
| 11 | F31102 | 3 | The motor control protection subsystem unexpectedly disabled the PWM. | Check for the presence of other faults that may indicate root cause of the problem. |
| 12 | F32101* | 3 | | |
| 12 | F32102 | 3 | Unable to transmit EMCY message. | Internal software fault. |
| 13 | F33101 | 3 | Internal software fault. | Internal software fault. |
| 13 | F33102 | 3 | Out of memory. | Internal software fault. |
| 13 | F33103 | 3 | Unknown error raised by motor model code. | Internal software fault. |
| 13 | F33104 | 3 | Unable to allocate timer. | Internal software fault. |
| 13 | F33105 | 3 | Unable to post message to queue | Internal software fault. |
| 13 | F33106 | 3 | Unable to create task in scheduler | Internal software fault. |
| 13 | F33107* | 3 | | |
| 13 | F33108 | 3 | Internal software fault. | Internal software fault. |
| 13 | F33109 | 3 | Internal software fault. | Internal software fault. |
| 13 | F33110 | 3 | Internal software fault. | Internal software fault. |

## Fault Codes and Troubleshooting Chart (continued)

| LED Code | Smart View Fault Code | Fault Category | Possible Cause | Fault Clearance |
|---|---|---|---|---|
| 13 | F33111 | 3 | Internal software fault. | Internal software fault. |
| 13 | F33112 | 3 | Internal software fault. | Internal software fault. |
| 13 | F33113 | 3 | Internal software fault. | Internal software fault. |
| 13 | F33114 | 3 | Internal software fault. | Internal software fault. |
| 13 | F33115 | 3 | Internal software fault. | Internal software fault. |
| 13 | F33116 | 3 | Internal software fault. | Internal software fault. |
| 13 | F33117* | 3 | | |
| 13 | F33118* | 3 | | |
| 13 | F33119 | 3 | Internal software fault. | Internal software fault. |
| 13 | F33120 | 3 | Current sensor auto-zero current out of range. | Internal software fault. |
| 13 | F33121 | 3 | Communication error between host and DSP processors | Internal software fault |
| 13 | F33122 | 3 | Motor rotation detected as wrong direction. | Check motor wiring |
| 13 | F33123 | 3 | Motor rotation stalled. | Check motor wiring |
| 13 | F33124 | 3 | Internal software fault. | Internal software fault. |
| 14 | F34101 | 3 | EMCY message received from non-Sevcon node and anonymous EMCY level is set to 3. | Check status of non-Sevcon nodes on CANbus. |
| 1 | F41001 | 4 | EEPROM or flash configuration data corrumpted and data cannot be recovered. | |
| 1 | F41002 | 4 | VPDO mapped to non-existant or invalid object. | Check all VPDO mappings. |
| 1 | F41003 | 4 | At least one configuration object is out of range. | Set configuration object to valid value. Out of range object can be identified using 0x6621 or Engineering DVT CLI window. |
| 1 | F41004 | 4 | At least one configuration object is out of range where one object's range depends on another. | Check all dynamic range objects. Engineering DEV CLI window indicates the object out of range. |
| 1 | F41005 | 4 | Unable to automatically configure I/O and vehicle setup. | Check autoconfiguration objects. |
| 1 | F41006 | 4 | Unable to set battery voltage. | Check auxillary drives support low voltage configuration. |
| 2 | F42001* | 4 | | |
| 4 | F44001 | 4 | Line contactor did not close when coil is energized. | Check line contactor and wiring. |
| 4 | F44002 | 4 | Line contactor closed when coil is deenergized. | Check line contactor and wiring. |

## Fault Codes and Troubleshooting Chart (continued)

| LED Code | Smart View Fault Code | Fault Category | Possible Cause | Fault Clearance |
|---|---|---|---|---|
| 5 | F45001* | 4 | | |
| 5 | F45002* | 4 | | |
| 5 | F45003 | 4 | VERLOG signal failure. | Check peripheral devices. |
| 6 | F46001 | 4 | Digital input wire-off. | Check wiring. |
| 6 | F46002 | 4 | Analogue input outside of allowed range. | Check wiring |
| 6 | F46003 | 4 | Contactor driver over current. | Ensure contactor doesn't exceed maximum current and check contactor wiring. |
| 6 | F46004 | 4 | Contactor driver unable to achieve current target in current mode. | Ensure contactor driver current target is within range. |
| 6 | F46005 | 4 | Contactor driver not working. | Internal hardware fault. |
| 6 | F46006 | 4 | Contactor driver over temperature. | Ensure contactor driver doesn't exceed maximum current and check contactor wiring. |
| 6 | F46007 | 4 | Contactor driver unable to achieve current target in current mode. | Ensure contactor driver current target is within range. |
| 6 | F46008 | 4 | Contactor driver MOSFET short circuit detected. | Internal hardware fault. |
| 7 | F47002 | 4 | Capacitor voltage did not rise above 5V at power up. | Check power wiring. |
| 7 | F47003 | 4 | The voltage applied to the KL 15/30 is above the controller rated maximum. | Check KL 15/30 voltage. |
| 8 | F48001 | 4 | Controller heat sink has reached citical high temperature and has shut down. | Allow controller to cool down to normal operating temperatures. |
| 11 | F41101 | 4 | Encoder wire-off is detected. | Check encoder wiring. |
| 11 | F41102 | 4 | Motor current exceeded controller-rated maximum. | Check motor configuration. and wiring. |
| 11 | F41103 | 4 | Motor controller unableto maintain control of motor currents. | Check motor configuration. ensure motor speed is not too high. |
| 11 | F41104 | 4 | Motor control tripped due to motor overspeed. | Check motor configuration. ensure motor speed is not too high. |
| 11 | F41105 | 4 | Encoder is not aligned properly. | Ensure encoder offset is correctgly set or realign encoder. |
| 11 | F41106 | 4 | Large rate of change of current detected multiple times. Suspected MOSFET, motor or wiring short circuit. | Check motor wiring, especially for motor terminals shorted to B-. Check controller condition. |
| 11 | F41107 | 4 | Measured capacitor voltage has exceeded controller maximum. | Check motor configuration and wiring. |

## Fault Codes and Troubleshooting Chart (continued)

| LED Code | Smart View Fault Code | Fault Category | Possible Cause | Fault Clearance |
|---|---|---|---|---|
| 11 | F41108 | 4 | Unable to control output current. | Check wiring. |
| 12 | F42101 | 4 | CANbus fault condition detected on multinode system. | Check CANbus wiring. |
| 12 | F42102 | 4 | CANopen slave has not transmitted boot-up message at power up. | Check status of all nodes on CANbus. |
| 12 | F42103 | 4 | CANbus fault condition detected on multinode system. | Check CANbus wiring. |
| 12 | F42104 | 4 | CANbus fault condition detected on multinode system. | Check CANbus wiring. |
| 12 | F42105 | 4 | CANbus fault condition detected on multinode system. | Check CANbus wiring. |
| 12 | F42106 | 4 | CANbus fault condition detected on multinode system. | Check CANbus wiring. |
| 12 | F42107 | 4 | CANbus fault condition detected on multinode system. | Check CANbus wiring. |
| 12 | F42108 | 4 | CANbus fault condition detected on multinode system. | Check CANbus wiring. |
| 12 | F42110 | 4 | Received RPDO doesn't contain enough bytes. | Check PDLOs on all CANbus nodes are configured correctly and match up. |
| 12 | F42111 | 4 | Heartbeat not received within configured time out. | Check status of all nodes on CANbus. |
| 12 | F42112* | 4 | Internal CANbus fault. | Internal software fault. |
| 12 | F42113 | 4 | Internal CANbus fault. | Internal software fault. |
| 12 | F42114 | 4 | Internal CANbus fault. | Internal software fault. |
| 12 | F42115 | 4 | Internal CANbus fault. | Internal software fault. |
| 12 | F42116 | 4 | Internal CANbus fault. | Internal software fault. |
| 12 | F42117 | 4 | Internal CANbus fault. | Internal software fault. |
| 12 | F42118 | 4 | Internal CANbus fault. | Internal software fault. |
| 12 | F42119 | 4 | Internal CANbus fault. | Internal software fault. |
| 12 | F42120 | 4 | Internal CANbus fault. | Internal software fault. |
| 12 | F42121 | 4 | Internal CANbus fault. | Internal software fault. |
| 12 | F42122 | 4 | Internal CANbus fault. | Internal software fault. |
| 12 | F42123 | 4 | Internal CANbus fault. | Internal software fault. |
| 12 | F42124 | 4 | Internal CANbus fault. | Internal software fault. |
| 12 | F42125* | 4 | | |
| 12 | F42126* | 4 | | |
| 13 | F43101 | 4 | DSP reports invalid protocol version on dual processor platform. | Internal software fault. |
| 13 | F43102 | 4 | Internal hardware fault. | Internal hardware fault. |
| 13 | F43103 | 4 | Attempting to set too man faults. | Internal software fault. |
| 13 | F43104 | 4 | Communication error between host and DSP processors. | Internal hardware fault. |

## Fault Codes and Troubleshooting Chart (continued)

| LED Code | Smart View Fault Code | Fault Category | Possible Cause | Fault Clearance |
|---|---|---|---|---|
| 13 | F43105 | 4 | Less than 10% of the stack is free on one of the RTOS tasks. | Internal hardware fault. |
| 13 | F43106 | 4 | An internal logic supply rail has gone out of range. | |
| 14 | F44101 | 4 | EMCY message received from non-Sevcon node and anonymous EMCY level was set to 4. | CVheck status of non-Sevcon nodes on CANbus. |
| 1 | F51001 | 5 | Detected controller hardware version incompatible with software. | Check correct software is programmed into controller. Reprogram if necessary. |
| 1 | F51002 | 5 | Calibration settings in controller are out of range. | Controller requires recalibration in production. |
| 3 | F53001 | 5 | Voltage on B+ terminal exceeds rated maximum for controller. | Check battery condition and wiring. |
| 3 | F53002 | 5 | Motor current exceeded controller-rated maximum. | Check motor configuration and wiring. |
| 3 | F53003 | 5 | MOSFET/IGBT s/c detection on M1 top devices. | Check motor wiring. Check controller condition. |
| 3 | F53004 | 5 | MOSFET/IGBT s/c detection on M1 bottom devices. | Check motor wiring. Check controller condition. |
| 3 | F53005 | 5 | MOSFET/IGBT s/c detection on M2 top devices. | Check motor wiring. Check controller condition. |
| 3 | F53006 | 5 | MOSFET/IGBT s/c detection on M2 bottom devices. | Check motor wiring. Check controller condition. |
| 3 | F53007 | 5 | MOSFET/IGBT s/c detection on M3 top devices. | Check motor wiring. Check controller condition. |
| 3 | F53008 | 5 | MOSFET/IGBT s/c detection on M3 bottom devices.. | Check motor wiring. Check controller condition. |
| 3 | F53009 | 5 | Unable to complete MOSFET/IGBT tests at power up. | Internal software fault. |
| 3 | F53010 | 5 | IGBT driver failure | Check status of IGBT |
| 3 | F53011 | 5 | IGBT driver failure | Check status of IGBT |
| 3 | F53012 | 5 | IGBT driver failure | Check status of IGBT |
| 3 | F53013 | 5 | IGBT driver failure | Check status of IGBT |
| 3 | F53014 | 5 | IGBT driver failure | Check status of IGBT |
| 3 | F53015 | 5 | IGBT driver failure | Check status of IGBT |
| 13 | F53101 | 5 | Unable to identify hardware | Internal hardware fault |
| 14 | F54101 | 5 | EMCY message received from non-Sevcon node and anonymous EMCY level is set to 5. | Check status of non-Sevcon nodes on CANbus. |

# Appendix A: Industry Standards

The following text is provided as recommended by Part II, "For the User", of ANSI/ITSDF B56.8-2011, Safety Standard for Personnel and Burden Carriers. The manufacturer strongly endorses the contents of this specification.

6 GENERAL SAFETY PRACTICES

6.1 Introduction

6.1.1 Like other machines, carriers can cause injury if improperly used or maintained. Part II contains broad safety practices applicable to carrier operation. Before operation, the user shall establish such additional specific safety practices as may reasonably be required for safe operation.

6.1.2 Premise review — The user shall periodically review their premises, and as conditions warrant, identify areas where carriers should not be operated and to identify possible hazards such as the following examples:

(a) Steep Grade — In areas where steep grades exist, carrier operation should be restricted to the designated vehicle's pathways where possible, and shall be identified with a suitable warning giving the following information: "Warning, steep grade."

(b) Wet Areas — Wet areas could cause a carrier to lose traction and could affect steering, stability and braking.

(c) Sharp Turns, Blind Spots, Bridge Approaches — Sharp turns, blind spots, bridge approaches, and other potentially hazardous areas shall be identified with a suitable warning to the operator of the nature of the hazard and stating the proper precautions to be taken to avoid the hazard.

(d) Loose Terrain — Loose terrain could cause a carrier to lose traction and could affect steering, stability, and braking.

6.2 Operation

Experience has shown that carriers, which comply with the provisions, stated in paragraphs 9.4, 9.5, and 9.6 are stable when properly operated and when operated in accordance with specific safety rules and practices established to meet actual operating terrain and conditions. However, improper operation, faulty maintenance, or poor housekeeping may contribute to a condition of instability and defeat the purpose of the standard. Some of the conditions which may affect stability are failure of the user to follow safety practices; also, ground and floor conditions, grade, speed, loading, the operation of the carrier with improper loads, battery weight, dynamic and static forces, and the judgment exercised by the carrier operator.

(a) The user shall train carrier operators to adhere strictly to the operating instructions stated in this Standard.

(b) The user shall survey specific operating conditions and environment, and establish and train carrier operators to comply with additional, specific safety practices.

6.3 Nameplates, Markings, Capacity, and Modifications

6.3.1 The user shall maintain in a legible condition all nameplates, warnings, and instructions, which are supplied by the manufacturer.

6.3.2 Except as provided in 6.3.4, no modifications or alterations to a carrier, which may affect the capacity, stability, or safe operation of the carrier, shall be made without the prior written approval of the original carrier manufacturer or a successor thereof. When the carrier manufacturer or its successor approves a modification or alteration, appropriate changes shall be made to capacity plates, decals, tags, and operation and maintenance manuals.

6.3.3 As required under paragraphs 6.3.1 or 6.3.2, the manufacturer shall be contacted to secure new nameplates, warnings, or instructions, which shall then be affixed in their proper place on the carrier.

6.3.4 In the event that the carrier manufacturer is no longer in business and there is no successor in interest to the business, the user may arrange for a modification or alteration to a carrier, provided however, the controlling party shall:

(1) Arrange for the modification or alteration to be designed, tested, and implemented by an engineer(s) expert in carrier(s) and their safety;

(2) Maintain a permanent record of the design, test(s), and implementation of the modification or alteration;

(3) Make appropriate changes to the capacity plate(s), decals, tags, and operation and maintenance manuals;

(4) Affix a permanent and readily visible label on the carrier stating the manner in which the carrier has been modified or altered together with the date of the modification or alteration, and the name of the organization that accomplished the tasks.

6.4 Changing and Charging Storage Batteries for Electric Personnel and Burden Carriers

6.4.1 The user shall require battery changing and charging facilities and procedures to be in accordance with ANSI/NFPA 505 or as required by local ordinance.

6.4.2 The user shall periodically inspect facilities and review procedures to be certain that ANSI/NFPA 505 or as required by local ordinance, are strictly complied with, and shall familiarize carrier operators with it.

6.4.3 Maintenance and storage areas for carriers shall be properly ventilated to avoid fire hazards in accordance with applicable fire codes and ordinances.

Ventilation for internal combustion engine powered carriers shall be provided to remove flammable vapors (gases), fumes and other flammable materials. Consult applicable fire codes for specific levels of ventilation.

Ventilation for electric powered carriers shall be provided to remove the accumulation of flammable hydrogen gas emitted during the battery charging process.

The amount of hydrogen gas emitted depends upon a number of factors such as the condition of the batteries, the output rate of the battery charger and the amount of time the batteries are on charge. Because of the highly volatile nature of hydrogen gas and its propensity to accumulate in pockets, a minimum number of air changes per hour is required during charging.

Consult applicable fire and safety codes for the specific ventilation levels required as well as the use of explosion proof electrical apparatus. SAE J1718 can be followed to check for hydrogen gas levels.

6.5 Hazardous Locations

6.5.1 The user shall determine the hazard classification of the particular atmosphere or location in which the carrier is to be used in the accordance with ANSI/NFPA 505.

6.5.2 The user shall permit in hazardous areas only those carriers approved and of the type required by ANSI/NFPA 505.

6.6 Lighting for Operating Area

The user, in accordance with his responsibility to survey the environment and operating conditions, shall determine if the carrier requires lights and, if so, shall equip the carrier with appropriate lights.

6.7 Control of Noxious Gases and Fumes

When equipment powered by internal combustion engines is used in enclosed areas, the atmosphere shall be maintained within limits specified in the American Conference of Governmental Industrial Hygienists publication, "Threshold Limit Values for Chemical Substances and Physical Agents in the Workroom Environment." This may be accomplished by ventilation provided by the user, or the installation, use, and proper maintenance of emission control equipment recommended or provided by the manufacturer of the equipment.

6.8 Warning Device(s)

6.8.1 The user shall make periodic inspections of the carrier to be certain that the sound-producing and/or visual device(s) if so equipped are maintained in good operating condition.

6.8.2 The user shall determine if operating conditions require the carrier to be equipped with additional sound producing or visual devices or both and be responsible for providing and maintaining such devices, in accordance with the manufacturer's recommendations.

6.9 Safety Interlocks

The user shall make periodic inspections of the carrier to be certain that the safety interlock system, if so equipped, is operating properly.

7 OPERATING SAFETY RULES AND PRACTICES

7.1 Personnel and Burden Carrier Operator Qualifications

Only persons who are trained in the proper operation of the carrier shall be authorized to operate the carrier. Operators shall be qualified as to visual, auditory, physical, and mental ability to safely operate the equipment according to Section 7, and all other applicable parts of this Standard and the operators' manual.

7.2 Personnel and Burden Carrier Operators' Training

7.2.1 The user shall conduct an operators' training program.

7.2.2 Successful completion of the operators' training program by the operator shall be required before operation of the carrier. The program shall be presented in its entirely to all new operators and not condensed for those claiming previous experience.

7.2.3 The user shall include as a minimum in the operators' training program the following:

(a) Instructional material provided by the manufacturer including the operators' manual;

(b) Emphasis on safety of passengers, material loads, carrier operator, and other person(s);

(c) General safety rules contained within this Standard and the additional specific rules determined by the user in accordance with this Standard, and why they were formulated;

(d) Introduction of equipment, control locations and functions, and explanation of how they work when used properly and when used improperly; and surface conditions, grade, and other conditions of the environment which could affect carrier operation;

(e) Operator competency evaluations.

7.3 Personnel and Burden Carrier Operator Responsibility

7.3.1 General Operator Responsibility

7.3.1.1 Read and follow operators' manual.

7.3.1.2 Do not operate carrier under the influence of drugs and alcohol.

7.3.1.3 Safeguard the pedestrians at all times. Do not drive carrier in a manner that would endanger other persons.

7.3.1.4 Riding on the carrier by persons other than the operator is authorized only on personnel seat(s) provided by the manufacturer. All parts of each person's body shall remain within the plan view outline of the carrier.

7.3.1.5 When a carrier is to be left unattended, stop the carrier, apply the parking brake, stop the engine or turn off power, turn off the control or ignition circuit, and remove the key if provided. Additionally, for electric carriers, the forward and reverse directional controls should be neutralized if a means is provided. Block the wheels if the carrier is on an incline.

7.3.1.6 A carrier is considered unattended when the operator is 7.6m (25 ft) or more from the carrier which remains in his view, or whenever the operator leaves the carrier and it is not within his view. When the operator is dismounted and within 7.6m (25 ft) of the carrier still in his view, he still must have controls neutralized, and the parking brake(s) set to prevent movement.

7.3.1.7 Maintain a safe distance from potential hazards, such as edges of ramps and platforms.

7.3.1.8 Use only approved carriers in hazardous locations, as defined in the appropriate safety standards.

7.3.1.9 Report all accidents to the user.

7.3.1.10 Do not add to, or modify, the carrier.

7.3.1.11 Carriers shall not be parked or left unattended such that they block or obstruct fire aisles, access to stairways, or fire equipment.

7.3.1.12 Only operate carrier while within operator's station.

7.3.2 Traveling

7.3.2.1 Observe all traffic regulations, including authorized speed limits. Under normal traffic conditions keep to the right. Maintain a safe distance, based on speed of travel, from a carrier or vehicle ahead; and keep the carrier under control at all times.

7.3.2.2 Yield the right of way to pedestrians, ambulances, fire trucks, or other carriers/vehicles in emergency situations.

7.3.2.3 Do not pass another carrier or vehicle traveling in the same direction at intersections, blind spots, or at other dangerous locations.

7.3.2.4 Keep a clear view of the path of travel, observe other traffic and personnel, and maintain a safe clearance.

7.3.2.5 Slow down or stop, as conditions dictate, and activate the sound-producing warning device at cross aisles and when visibility is obstructed at other locations.

7.3.2.6 Ascend or descend grades slowly.

7.3.2.7 Avoid turning, if possible, and use extreme caution on grades, ramps, or inclines; normally travel straight up and down.

7.3.2.8 Under all travel conditions the carrier shall be operated at a speed that will permit it to be brought to a stop in a safe manner.

7.3.2.9 Make starts, stops, turns, or direction reversals in a smooth manner so as not to shift the load, endanger passengers, or lose control of the carrier.

7.3.2.10 Do not operate carrier in a dangerous manner.

7.3.2.11 Slow down when approaching, or on, wet or slippery surfaces.

7.3.2.12 Do not drive carrier onto any elevator unless specifically authorized to do so. Approach elevators slowly, and then enter squarely after the elevator car is properly leveled. Once on the elevator, neutralize the controls, shut off power, and set parking brakes. It is advisable that all other personnel leave the elevator before a carrier is allowed to enter or exit.

7.3.2.13 Avoid running over loose objects, potholes, and bumps.

7.3.2.14 Reduce carrier speed to negotiate turns.

7.3.2.15 Avoid any action verbal or physical by an operator or passenger, which could cause the operator to be distracted.

7.3.3 Loading

7.3.3.1 Refer to operators' manual for loading instruction.

7.3.3.2 Handle only stable and safely arranged loads. When handling off-center loads, which cannot be centered, operate with extra caution.

7.3.3.3 Handle only loads within the capacity of each cargo area of the carrier as specified by the manufacturer.

7.3.3.4 Avoid material loads exceeding the physical dimensions of the carrier or as specified by the carrier manufacturer.

7.3.4 Operator Care of Personnel and Burden Carriers

7.3.4.1 Read and follow operators' manual.

7.3.4.2 At the beginning of each shift during which the carrier will be used, the operator shall check the carrier condition and inspect the tires, warning devices, lights, battery(s), speed and directional controllers, brakes, safety interlocks, and steering mechanism. If the carrier is found to be in need of repair or is in any way unsafe, the matter shall be reported immediately to the user and the carrier shall not be operated until restored to safe operating condition.

7.3.4.3 If during operation the carrier becomes unsafe in any way, the matter shall be reported immediately to the user, and the carrier shall not be operated until it has been restored to safe operating condition.

7.3.4.4 Do not make repairs or adjustments unless specifically trained and authorized to do so.

7.3.4.5 Before refueling, the engine shall be stopped and allowed to cool. The operator and passengers shall leave the carrier before refueling.

7.3.4.6 Spillage of hazardous materials shall be contained immediately and addressed via appropriate hazardous materials regulations.

7.3.4.7 Do not operate a carrier with a leak in the fuel system or battery(s). Battery(s) shall be charged and serviced per manufacturer's instructions.

7.3.4.8 Do not use open flames for checking electrolyte level in storage battery(s) or liquid level in fuel tanks.

## 8 MAINTENANCE PRACTICES

### 8.1 Introduction

Carriers may become hazardous if maintenance is neglected. Maintenance facilities, trained personnel, and procedures shall be provided. Such facilities may be on or off the premises.

### 8.2 Maintenance Procedures

Maintenance and inspection of all carriers shall be performed in conformance with the following practices and should follow the manufacturer's recommendations.

(a) A scheduled preventive maintenance, lubrication, and inspection system shall be followed.

(b) Only trained and authorized personnel shall be permitted to maintain, repair, adjust, and inspect carriers.

(c) Before undertaking maintenance or repair, follow the manufacturer's recommendations for immobilizing the carrier.

(d) Chock wheels and support carrier before working underneath it.

(e) Before disconnecting any part of the engine fuel system, be sure the shutoff valve, if so equipped, is closed and follow carrier manufacturer's recommended practice.

(f) Operation to check performance of the carrier shall be conducted in an authorized area where suitable conditions exist, free of vehicular and pedestrian traffic.

(g) Before returning carrier to service, follow the manufacturer's instructions and recommended procedures.

(h) Avoid fire hazards and have fire protection equipment present in the work area. Do not use an open flame to check level or leakage of fuel, battery electrolyte, or coolant.

(i) Properly ventilate the work area in accordance with applicable regulations or local ordinance.

(j) Handle fuel cylinders with care. Physical damage, such as dents, scrapes, or gouges, may dangerously weaken the tank and make it unsafe for use.

(k) Brakes, steering mechanisms, speed and directional control mechanisms, warning devices, lights, governors, guards, and safety devices shall be inspected regularly and maintained in accordance with manufacturer's recommendations.

(l) Carriers or devices designed and approved for hazardous area operation shall be inspected to ensure that maintenance preserves the original approved safe operating features.

(m) Fuel systems shall be checked for leaks and condition of parts. If a leak is found, action shall be taken to prevent the use of the carrier until the cause of the leak has been repaired.

(n) The carrier manufacturer's capacity, operation, and maintenance instruction plated, tags, or decals shall be maintained in legible condition.

(o) Batteries, motors, speed and directional controllers, limit-switches, protective-devices, electrical conductors/insulators, and connections shall be inspected and maintained per carrier manufacturer's recommendation.

(p) Carriers shall be kept clean to minimize hazards and facilitate detection of components needing service.

(q) Modifications and additions which affect capacity and safe carrier operation shall not be performed without manufacturer's prior written authorization; where authorized modifications have been made, the user shall ensure that capacity, operation, warning, and maintenance instruction plates, tags, or safety labels are changed accordingly.

(r) Care shall be taken to ensure that all replacement parts are interchangeable with the original parts and of a quality at least equal to that provided in the original equipment.

(s) Disconnect batteries, negative connection(s) first. When reconnecting, connect positive connection first.

(t) Hydraulic systems, if so equipped, shall be checked for leaks, for condition of parts. Keep body and hands away from pin-holes or nozzles that eject fluids under high pressure. Use paper or cardboard, not hands, to check for leaks.

# Appendix B: Programming the Safe-T-Lock Switch

SAFE-T-LOCK™ is an optional programmable code switch which prevents unauthorized use of the vehicle (part number 38206). The SAFE-T-LOCK switch is installed in lieu of the standard switch to control access and operation of the vehicle within the customer's premises. It can be factory installed or purchased separately to upgrade existing vehicles.

The switch allows plant and facility managers to input up to 99 different users/drivers to track vehicle usage. If an accident occurs, or the vehicle is damaged, the manager can easily identify the last operator. The switch also features an internal clock that records "on" hours and notifies the operator when the 250-hour mark is reached.

Each user can select a four-to eight digit personal access code and a separate supervisor user menu programs the unit. The switch will provide the last user ID code when prompted by the supervisor. Only users with active ID codes can operate the vehicle, virtually eliminating all unauthorized use.

The switch operates in a voltage range from 9 to 120 volts DC and is enclosed in an IP65 rated housing. Two internal LEDs indicate operational status - red indicates an error or lock mode and green indicates key press or touch is active. The unit also provides user feedback with key beep and error tones.

**Step-by-Step Programming Instructions:**

1 – Log onto the Supervisor Mode. Press 0 0 1 2 3 4 ENTER. Red and Green LED flashes along with an up tone beep indicate you are in the Supervisor Mode and ready to enter a Supervisor Mode menu.

Note: As you enter each Supervisor Mode menu, the number of Red LED flashes will correspond to the menu number. For example, one Red LED flash for menu 1, two Red LED flashes for menu 2, etc.

Before changing the Supervisor PIN, you are first going to add User locations. For this example you will check on and add User location 01 as well as more User locations as required. To do this you must go into the Add / Delete User Menu.

2 – Go into Add / Delete User Menu. Press 2 ENTER. There will be a beep along with two Red LED flashes indicating you are in Menu 2. Press 0 1 ENTER. If there is a Red flash and a low beep, it indicates that user location 01 has already been assigned. To remove location 01, press ENTER again. This will delete the location from use.

Add location 01. Press 0 1 ENTER. You should now get a Green flash along with an up tone beep indicating the location is ready to be added or assigned to a user. Press ENTER. You will get a Green LED flash along with a beep. The user location has been added.

At this point you can, in the same way, check on and add more user locations.

Before leaving Menu 2, check to make sure that location 01 and any others have been added. Press 0 1 ENTER. There should be a Red LED flash along with a low tone beep indicating the location has been assigned to the user. Check any other locations you've added the same way. A Red flash along with a low tone beep means the location has been assigned. A Green flash along with an up tone beep means the location is not assigned.

3 – Go out of Menu 2. Press CE. The switch will indicate you are back in Supervisor Mode. Press CE again to go out of Supervisor Mode. (CE can be pressed several times to make sure you are completely clear and ready to enter the next mode.)

4 – Log onto the User Mode. Press 0 1 1 2 3 4 ENTER. The switch will close and the Green LED will flash at a slow rate.

5 – Change User PIN. First decide on a new PIN. In this example, use 5 4 3 2 1. Press 1, ENTER. (This puts you in the Change User PIN Menu.) Note that the switch will open when you go into this menu.

Note: The User has 1 minute after logging on the User Mode to use menu 1 before the menu function is locked out until the next User log on.

Press 5 4 3 2 1 ENTER, and again press 5 4 3 2 1 ENTER. The switch will indicate that the new PIN has been accepted.

6 – Use the new PIN to close the switch. Press 0 1 5 4 3 2 1 ENTER. The switch will close. Press ENTER to open the switch and go out of User Mode. (Since this is an example, you may want to set the PIN for User location 01 back to the 1 2 3 4 default.)

7 – Log back onto the Supervisor Mode to change the Supervisor PIN. Press 0 0 1 2 3 4 ENTER. Press 1 ENTER to go into the Change Supervisor PIN Menu. The red LED will flash once. Now just as you did in the User Mode, put the new PIN in twice and enter each time. Example: Press 5 4 3 2 1 ENTER, and again 5 4 3 2 1 ENTER. The switch will give an indication that the PIN was changed.

8 – Go out of Menu 1. Press CE. Press CE again to Log Off the Supervisor Mode.

9 – Check out the new Supervisor PIN. Press 0 0 5 4 3 2 1 ENTER. You should be in Supervisor Mode. You can now go to any menu by pressing the menu number and ENTER.

Remember: This is an example. You should change your Supervisor PIN to one known only to you.

10 – Determine Last User. While in Supervisor Mode press 3 ENTER. This places you in the Last User Menu as indicated by three red LED flashes. Press ENTER again. The LED flashes will indicate the last user. The Green LED is for the 10's digit. The Red LED is for the 1's digit. Example 1: A single Red LED flash indicates User 01 last operated the vehicle. Example 2: Two Green flashes and three Red flashes would indicate User 23 last operated the vehicle. Press CE to leave the menu.

11 – Enable or Disable Maintenance Alarm. Press 4 ENTER. There will be four red LED flashes. Press ENTER again. If the Green LED flashes, the alarm is enabled. Press ENTER again and the Red LED will flash showing the alarm to be disabled. Press ENTER again and the Green LED will flash showing the alarm to be again enabled.

12 – Listen to the maintenance alarm. While in Menu 4 press 1 ENTER. The maintenance alarm will sound. Press CE to leave the menu. Press CE again to Log Off the Supervisor Mode.

Note: If the switch is left unattended in Supervisor Mode, it will automatically exit the mode after approximately one minute.

13 – If you are unable to get into the Supervisor Mode after trying either the default PIN or a newly assigned PIN, go back to Step 1 and reset the switch.

If you need assistance or have questions about programming or installing the SAFE-T-LOCK, call Tech Support at 1-800-241-2869.

# Appendix C: Specifications

| Model | Deck Width | Deck Length | Deck Capacity | Towing Capacity | Turning Radius |
|---|---|---|---|---|---|
| BC-520 NXG | Front: 35.5″<br>Rear: 35.5 | Front: 18″<br>Rear: 30″″ | Front: 200 lbs<br>Rear: 1,000 lbs | 2,000 lbs | 74.5″ |
| BC-620 NXG | Front: 35.5″<br>Rear: 35.5 | Front: 18″<br>Rear: 30″″ | Front: 200 lbs<br>Rear: 1,000 lbs | 2,000 lbs | 92.0″ |
| BC-625 NXG | Front: 35.5″<br>Rear: 35.5 | Front: 18″<br>Rear: 53″ | Front: 200 lbs<br>Rear: 1,000 lbs | 2,000 lbs | 80″ |
| BCT-5200 NXG | Front: 35.5″<br>Rear: 35.5 | Front: 18″<br>Rear: 30″″ | Front: 200 lbs<br>Rear: 1,200 lbs | 5,000 lbs<br>6,000 lb | 74.5″ |
| BCT6200 NXG | Front: 35.5″<br>Rear: 35.5 | Front: 18″<br>Rear: 30″″ | Front: 200 lbs<br>Rear: 1,200 lbs | 5,000 lbs<br>6,000 lbs | 92″ |
| BCT-6250 NXG | Front: 35.5<br>Rear:35.5 | Front: 18″<br>Rear: 53″ | Front: 200 lbs<br>Rear: 1,200 lbs | 5,000 lbs<br>6,000 lbs | 80″ |
| BCG-6200 | Front: 35.5<br>Rear:35.5 | Front: 21.3″<br>Rear: 25″ | Front: 200 lbs<br>Rear: 1,000 lbs | 8,000lbs | 80″ |

# Appendix D: Components—Electrical

| Part | Part Number |
|---|---|
| Key Switch, 2-position (standard) | 16226 |
| Key Replacement, set of 2 | 14142 |
| Switch Kit (Switch, keys, and hardware) | 39216 |
| Directional Switch, 3 position Rocker | 16109 |
| Horn | 16100 |
| Horn Button | 16069 |
| 10 Amp Fuse | 16042 |
| Fuse Holder | 16046 |
| Charger Cord | 16238 |
| Onboard Battery Charger, 24 volt, Standard Batteries | 16182 |
| Onboard Battery Charger, 24 volt, AGM Batteries | 16340 |
| Onboard Battery Charger, 36 volt, Standard Batteries | 16183 |
| Onboard Battery Charger, 36 volt, AGM Batteries | 16339 |
| Onboard Battery Charger, 48 volt, Standard Batteries | 16184 |
| Onboard Battery Charger, 48 volt, AGM Batteries | 16338 |
| Directional Switch, 3 position Toggle | 16060 |
| Perma-Key Switch | 16134 |
| On/Off Switch | 16047 |
| Programmable Code Security Switch | 38206 |
| Headlight/Taillight Switch, Rocker | 16108 |

# Appendix D: Components—Electrical (cont.)

| Part | Part Number |
|---|---|
| Single LED Status Plate | 10006 |
| Brake Pedal Switch | 16093 |
| 6-volt Battery, 245 Amp/Hr | 16063 |
| Accelarator Pedal Assembly | 28013 |
| Motor, Advanced AC, 4.0 KW | 16400 |
| Battery Discharge Indicator | 16403 |
| Controller, 275 Amp, 36/48 V Programmed | 16504 |
| Solenoid 24 V, 4 Pole, HD | 16041 |
| Foot Presence Switch, 24 V | 40126 |
| Foot Presence Switch, 36/48 V | 40128 |
| Throttle Hall Effect Peal Assembly | 28142 |

# Appendix E: Front Axle

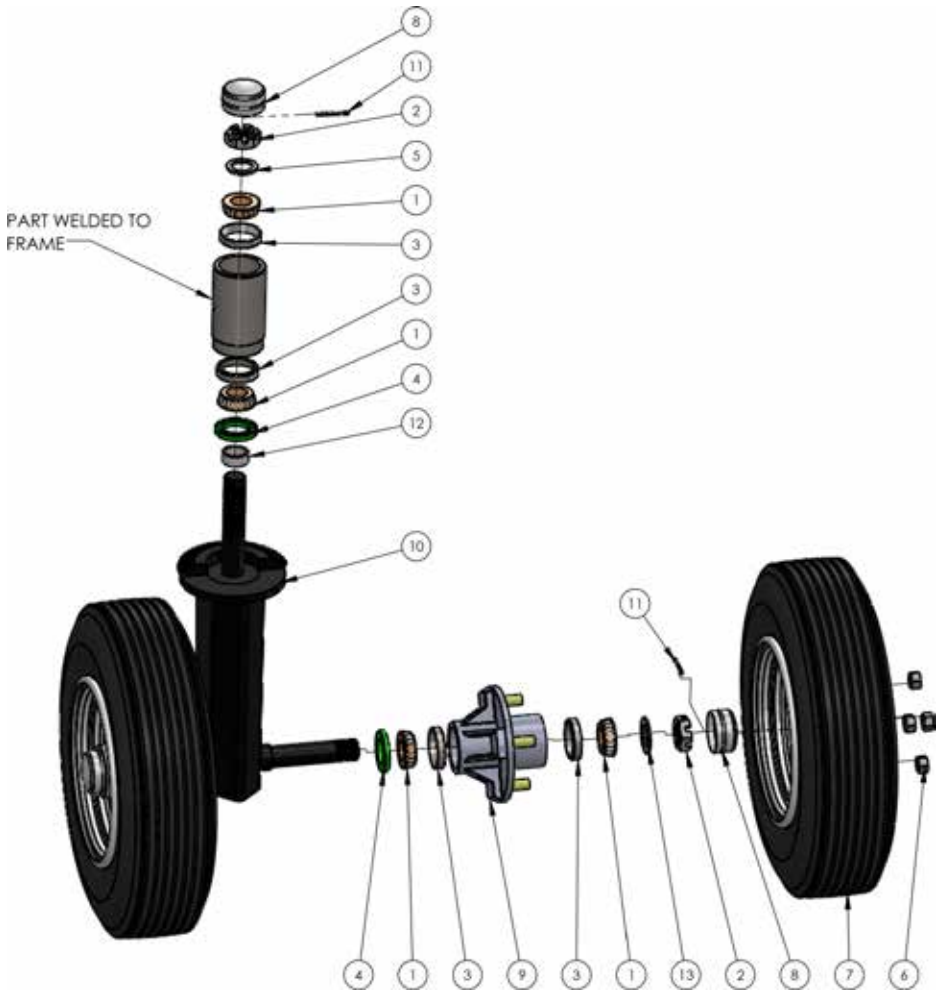


| # | Description | Part # | Qnty |
|---|---|---|---|
| 1 | Bearing, Tapered Roller | 18060 | 6 |
| 2 | Nut, 1-14", Castle | 14235 | 3 |
| 3 | Bearing Race | 18062 | 6 |
| 4 | Oil Seal | 18058 | 3 |
| 5 | Shim, 0.062" x 1.0" x 1.5" | 14289 | 0, 1, 2 |
| 6 | Nut, 1/2-13, Hex, ZN PL | 14157 | 8 |
| 7 | Tire and Wheel, 4 Lug, 4.80x8, Standard | 26055 | 2 |
| 8 | Cap, Hub Bearing | 18064 | 3 |
| 9 | Hub, Wheel, 4-Lug | 26054 | 2 |
| 10 | Strut, Front Steering, SC, SCT, BC, BCT Weldment, | 36010B | 1 |
| 11 | Pin, Cotter, 3/16" x 1-1/4" | 14238 | 3 |
| 12 | Spacer, 1.25 x 1.0 x 0.5l | 22480 | 1 |
| 13 | Washer, Hub Bearing | 18079 | 2 |

# Appendix F: Transaxle—BC NXG Series

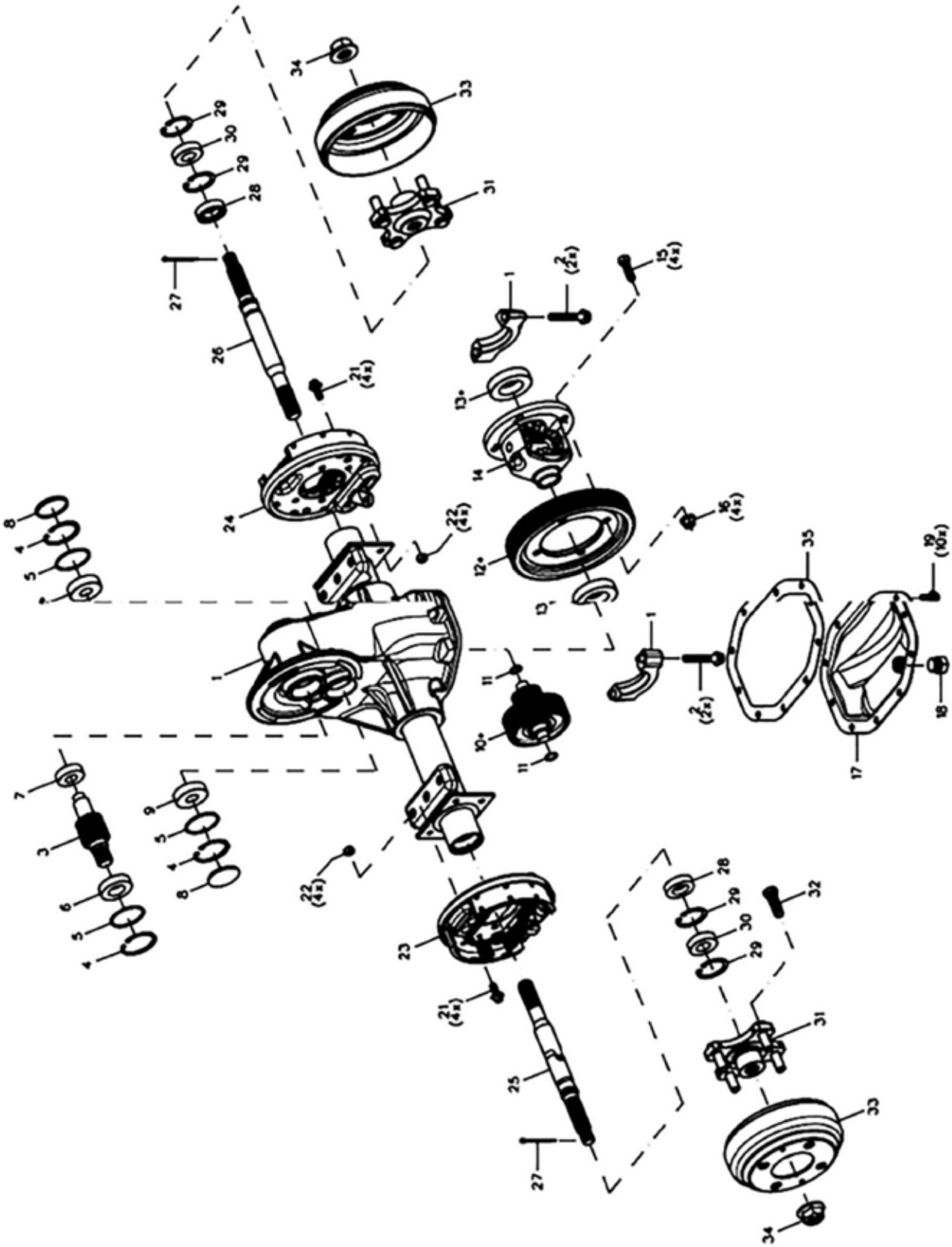

| # | Description | Part Number | Quantity |
|---|---|---|---|
| All | Complete Transaxle, 36W | 30003 | |
| 3 | Gear, Input | See Kit | 1 |
| 4 | Ring, Retaining | 14232 | 3 |
| 5 | O-Ring | 18057 | 3 |
| 6 | Bearing, Ball | 30087 | 1 |
| 7 | Bearing, Ball | 30011 | 1 |
| 8 | Plug, End Cap | 30013 | 2 |
| 9 | Bearing, Ball | 30009 | 2 |
| 10 | Gear, Intermediate Assembly | See Kit | |
| 11 | O-Ring | 30008 | 2 |
| 12 | Gear, Final Drive | See Kit | |
| 13 | Bearing, Ball | 30007 | 2 |
| 15 | Screw, Cap | 30088 | 4 |
| 16 | Nut, Lock | 30089 | 4 |
| 17 | Plate, Cover | 30014 | 1 |
| 18 | Plug, Fill | 30062 | 1 |
| 19 | Screw, Cover Plate | 30090 | 10 |
| 23 | Brake Assembly, Left-Hand Shoe Type | 30024 | 1 |
| 24 | Brake Assembly, Right-Hand Shoe Type | 30026 | 1 |
| 25 | Shaft, Axle 36" Left Hand (23 1/4 length) | 30063 | |
| 26 | Shaft, Axle Right-Hand | 30074 | 1 |
| 28 | Seal, Oil | 30021 | 2 |
| 29 | Ring, Retaining | 30020 | 4 |
| 30 | Bearing, Ball | 30019 | 2 |
| 31, 32. 33 | Hub and Drum—4-lug assembly with studs | 36559 | 2 |
| 34 | Nut,Flange Hex | 30034 | 2 |
| Kit | Kit, Gear Set (Includes #3, #10, #12) | 30035 | 1 |
| Kit | Kit, Input, Shaft 12.44:1 Ratio (Includes #3, #4, #5, #6, #7) | 30022 | |

# Appendix G: Transaxle—BCT NXG Series

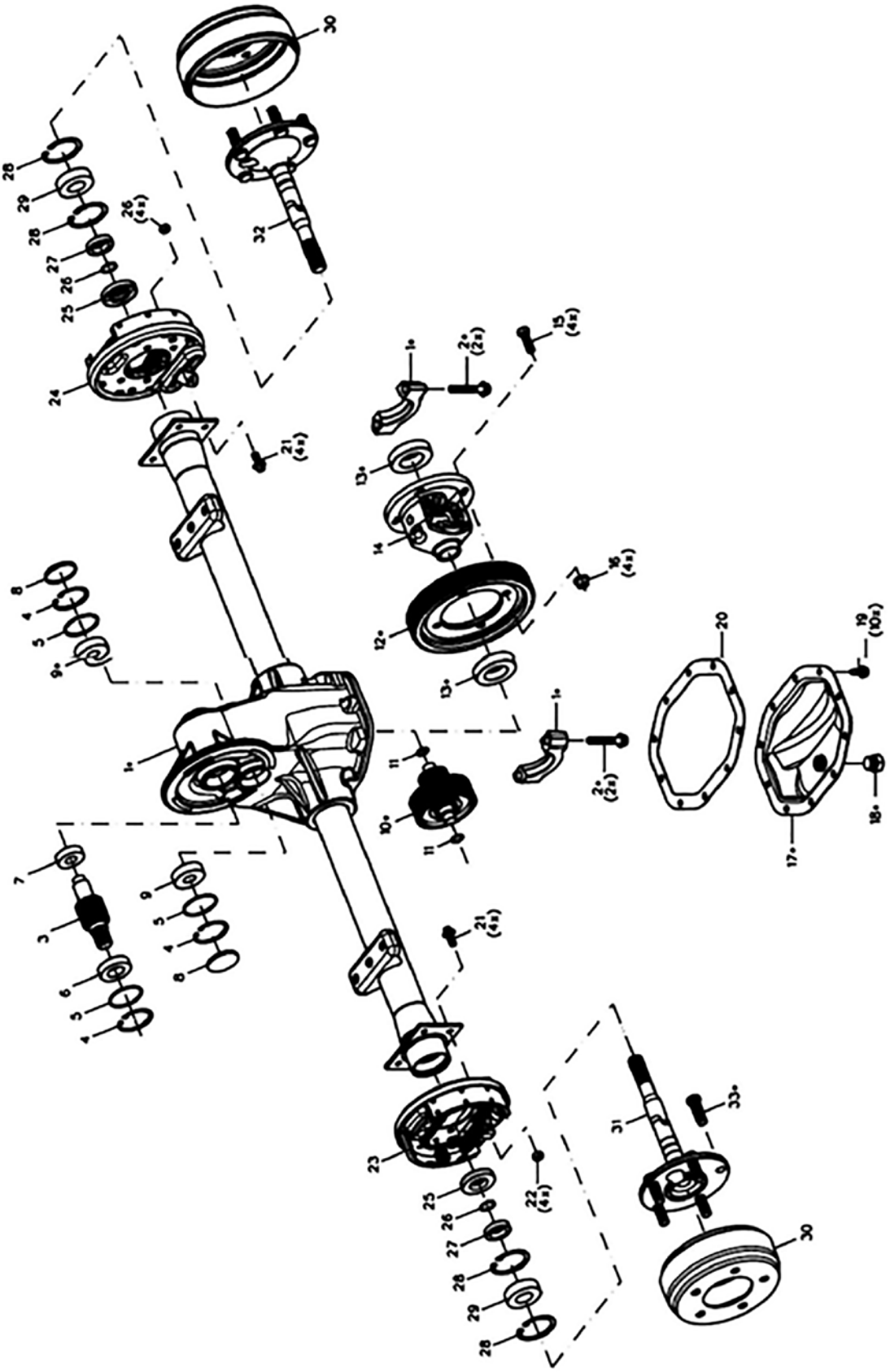

| # | Description | Part Number | Quantity |
|---|---|---|---|
| All | Complete Tugger Transaxle, 32W | 39156 | |
| 3 | Gear, Input | See Kit | 1 |
| 4 | Ring, Retaining | 14232 | 3 |
| 5 | O-Ring | 18057 | 3 |
| 6 | Bearing, Ball | 30087 | 1 |
| 7 | Bearing, Ball | 30011 | 1 |
| 8 | Plug, End Cap | 30013 | 2 |
| 9 | Bearing, Ball | 300091 | 2 |
| 10 | Gear,  Intermediate Assembly | See Kit | |
| 11 | O-Ring | 30008 | 2 |
| 12 | Gear, Final Drive | See Kit | |
| 13 | Bearing, Ball | 30007 | 2 |
| 15 | Screw, Cap | 30088 | 4 |
| 16 | Nut, Lock | 30089 | 4 |
| 17 | Plate, Cover | 30014 | 1 |
| 18 | Plug, Fill | 30062 | 1 |
| 19 | Screw,  Cover Plate | 30090 | 10 |
| 23 | Brake Assembly, Left-Hand Shoe Type | 30024 | 1 |
| 24 | Brake Assembly, Right-Hand Shoe Type | 30026 | 1 |
| 25 | Oil Seal, jAxle Shaft | 30037 | 2 |
| 26 | Ring, Retaining, Tugger | 30038 | 2 |
| 27 | Ring, Retaining, Wheel Bearing) | 30039 | 4 |
| 28 | Ring, Retaining, Tugger | 30040 | 2 |
| 29 | Bearing, Ball, Tugger | 30041 | 2 |
| 30 | Drum, Brake, 5 Lug | Use Item 37 | 2 |
| 31 | Shaft, Left-Hand Axle 5 Lug | 30043 | 1 |
| 32 | Shaft, Right-Hand Axle 5 Lug” | 30070 | 1 |
| Kit | Tugger Gear Set (Includes#3, #10, #12 | 30045 | |
| 37 | Drum Assembly (5-lug) | 30082 | |
| Kit | Kit, Input, Shaft 12.44:1 Ration ( Includes #3, #4, #5, #6, #7) | 30022 | |

# Appendix H: Beacon (Optional)

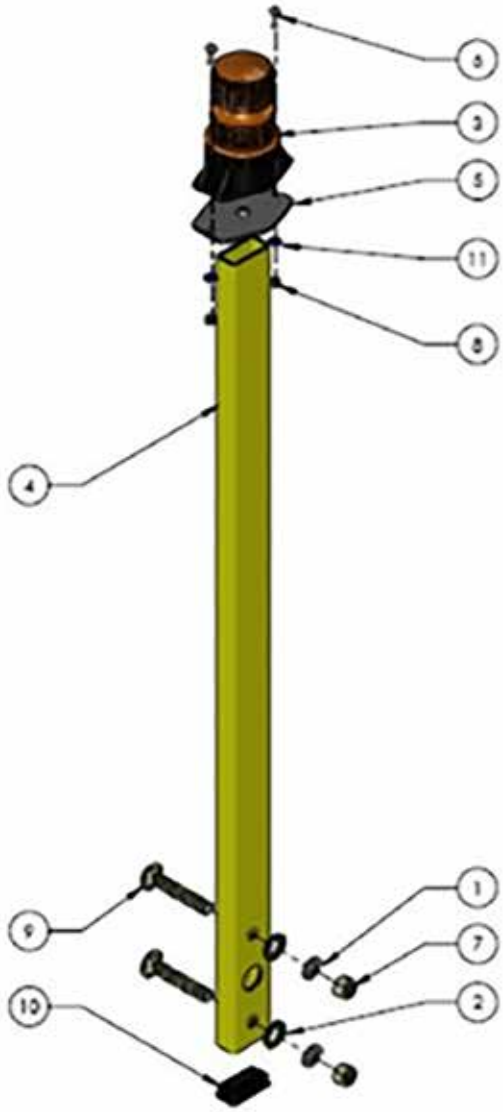


| Number | Description | Part Number | Quantity |
|---|---|---|---|
| 1 | Washer, Split Lock, 1/2" ID | 14127 | 1 |
| 2 | Washer, 1/2"ID SAE Zn | 14133 | 2 |
| 3 | Beacon, Pedestal Base | 16124 | 1 |
| 4 | Pole, Beacon Mount | 23341 | 1 |
| 5 | Plate, Beacon Base Mount | 22327 | 1 |
| 6 | 10-32 x 1/2" PHMS | 14159 | 2 |
| 7 | Nut, Hex, 1/2-13 Zn Plated | 14157 | 2 |
| 8 | Locknut, Nylon Insert, 10-32 | 14158 | 2 |
| 9 | 1/2-13 x 3.0" RHSN Gr.2 | 14169 | 2 |
| 10 | Plug, Tube End, 1 x 2 | 14182 | 1 |
| 11 | Washer, Rivet, 3/16 ID | 14199 | 2 |

# Appendix I: Options

| Part | Part # |
|---|---|
| Battery Watering System, GC-145, 24 volt | 38013 |
| Battery Watering System, GC-145, 36 volt | 38157 |
| Battery Watering System, GC-145, 48 volt | 38010 |
| Gravity Water Filling System | 38013 |
| Flashing Safety Beacon (Amber) | 38322 |
| Flashing Safety Beacon (Blue) | 38323 |
| Headlight Kit, Blue Spot, LED, 10-48 volt | 41014 |
| Headlight Kit, White LED, 10-48 volt | 41015 |
| Back-up Alarm Kit | 41012 |
| Proximity Alarm Kit | 41018 |
| Hitch, Spring-Loaded Clevis, 1" Pin Kit | 38158 |
| Hitch, Spring-Loaded Clevis, 5/8" Pin Kit | 38028 |
| Hitch, Pintle Kit | 38029 |
| Hitch, Eye 2-3/8" Kit | 39211 |
| Hitch, Auto Coupling Kit | 38023 |
| Hitch, Ball, 2" Kit | 36407 |
| Hitch Ball, 1-7/8 Kit | 36409 |

PACK MULE

Pack Mule Electric Vehicles are products of Wesley International, LLC

3680 Chestnut Street • Scottdale, GA 30079 • Phone (404) 292-7441 • Toll Free (800) 241-2869 • Fax (404) 292-8469

info@wesleyintl.com • www.wesleyinternational.com

*JFMBGB010818*