GENERAL REFERENCE DRAWING - CENTER PIVOT - 2 DECK

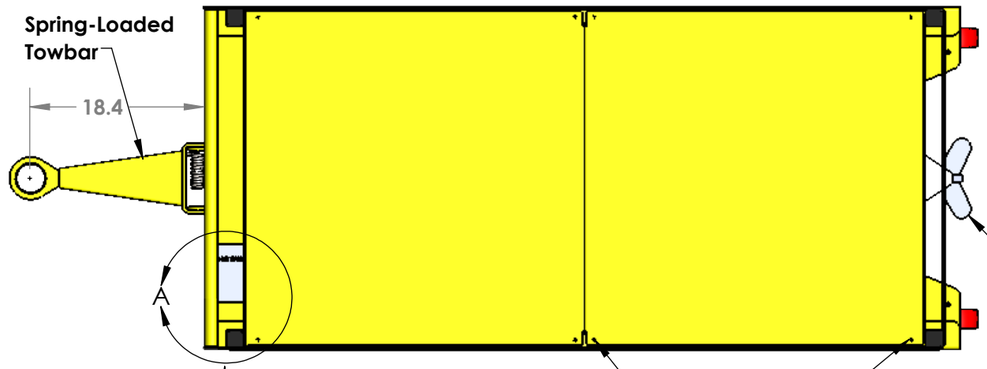

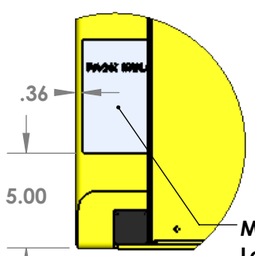

DETAIL A
SCALE 1 : 8

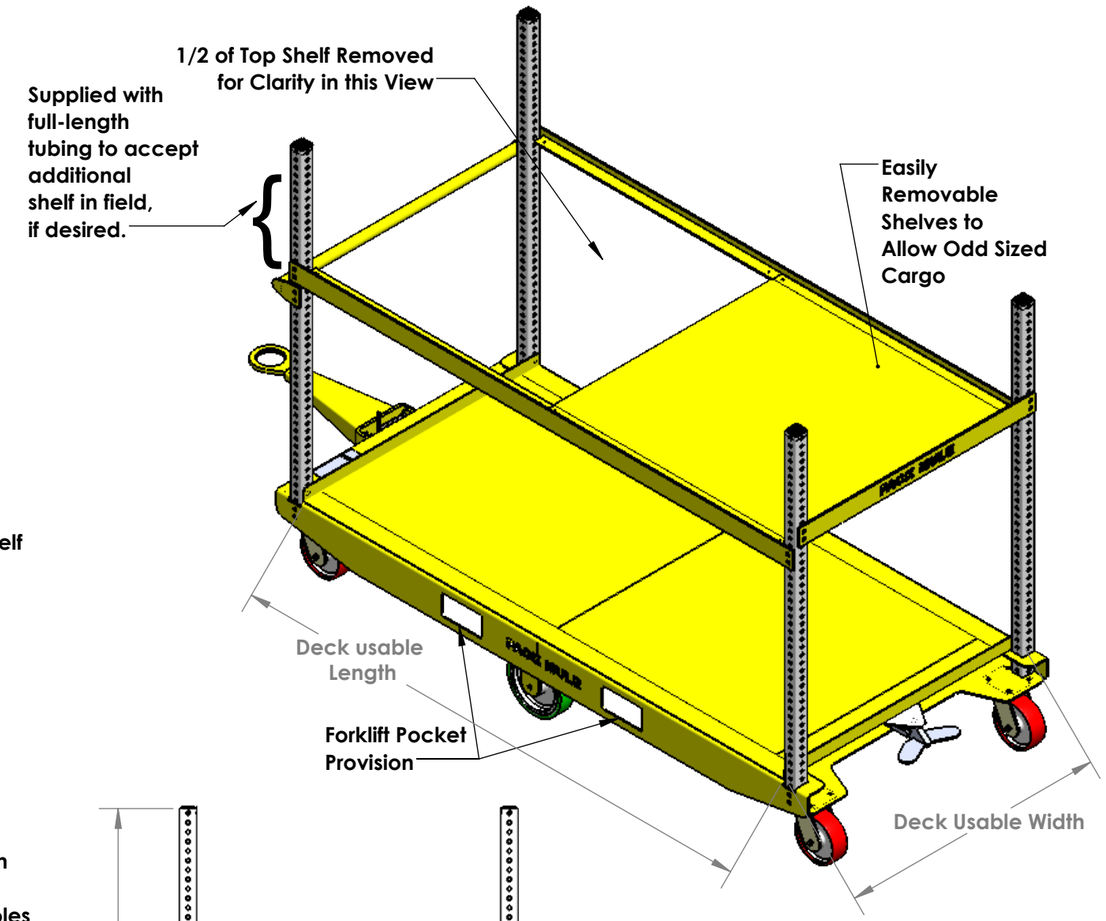

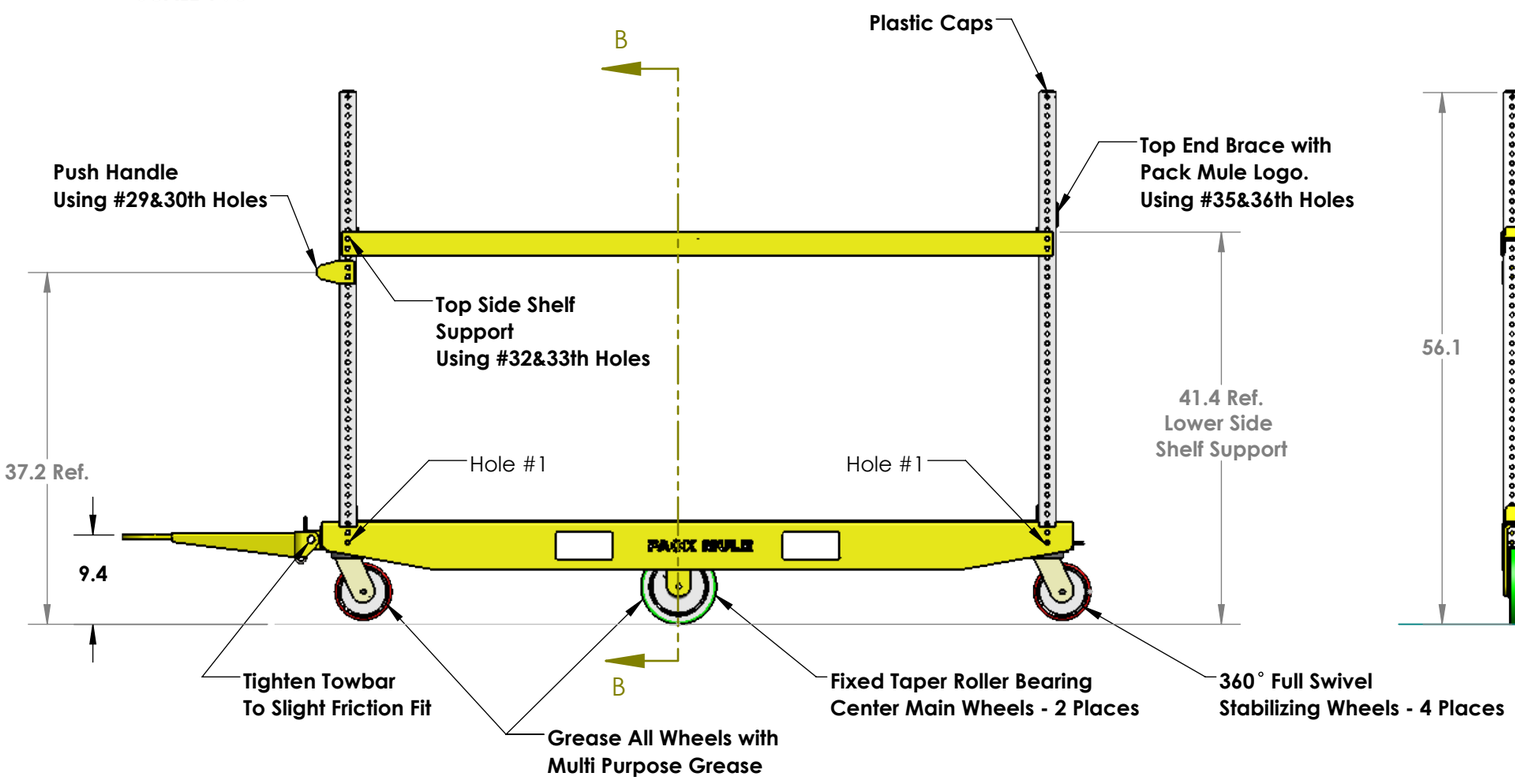

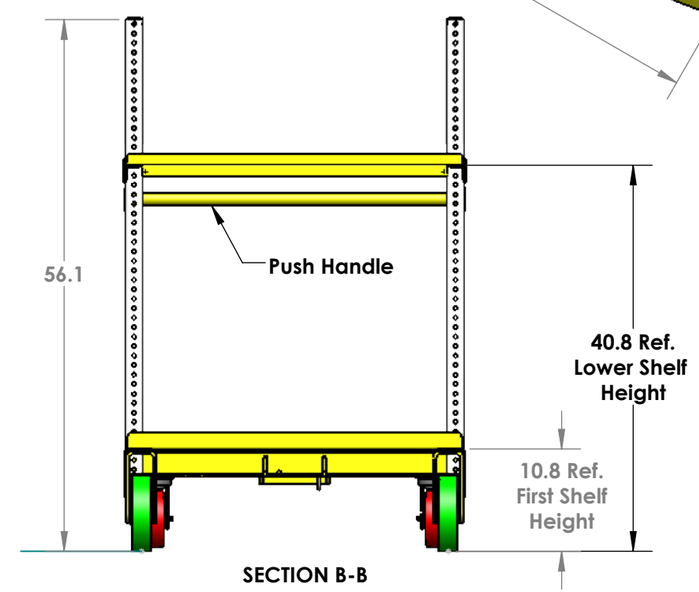

SECTION B-B