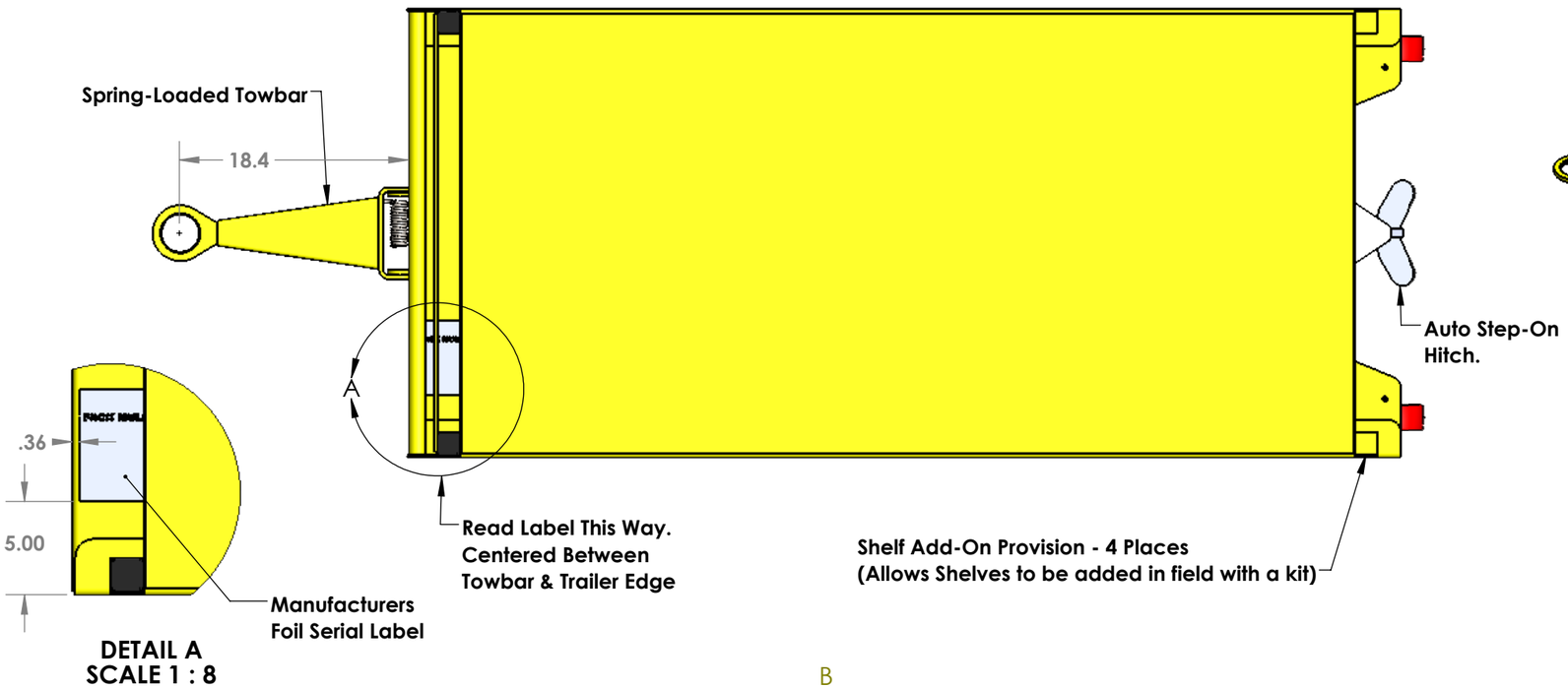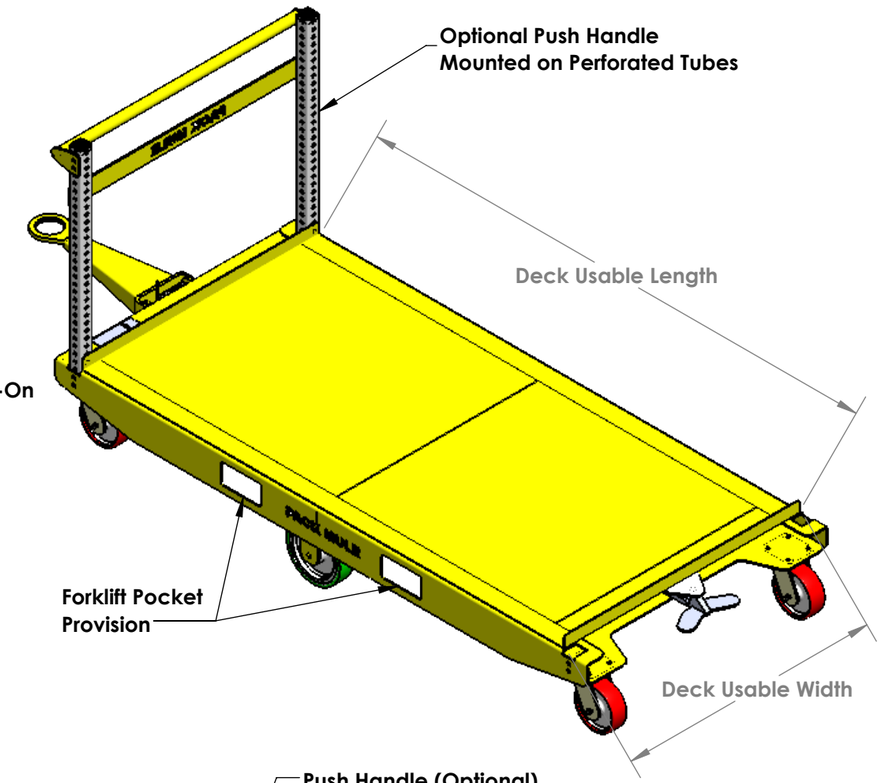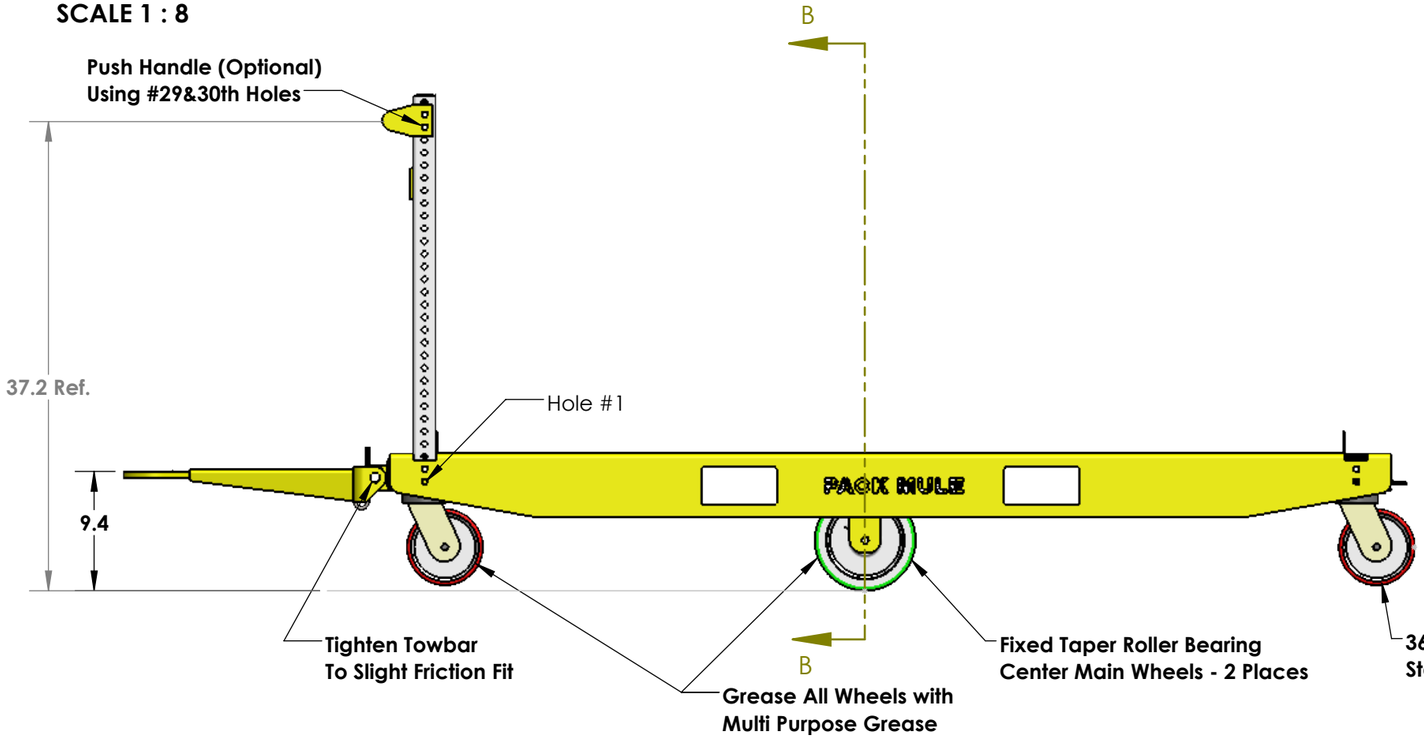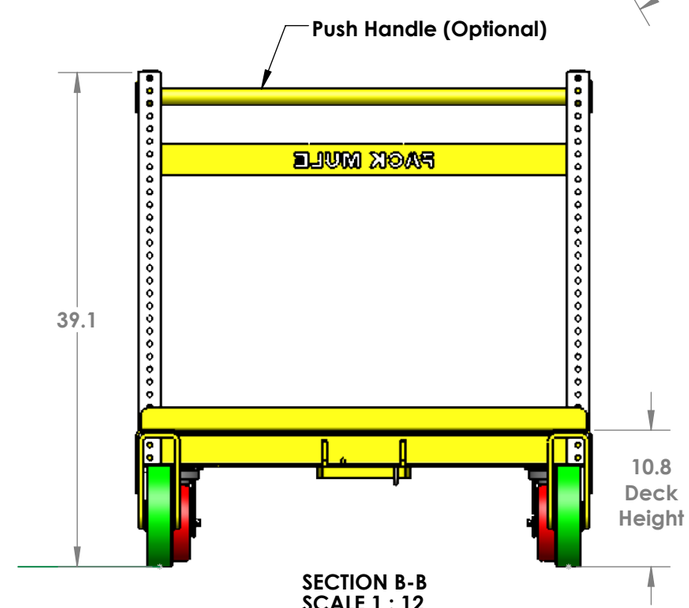GENERAL REFERENCE DRAWING - CENTER PIVOT - SINGLE DECK